EXPLODED VIEW : INDOOR

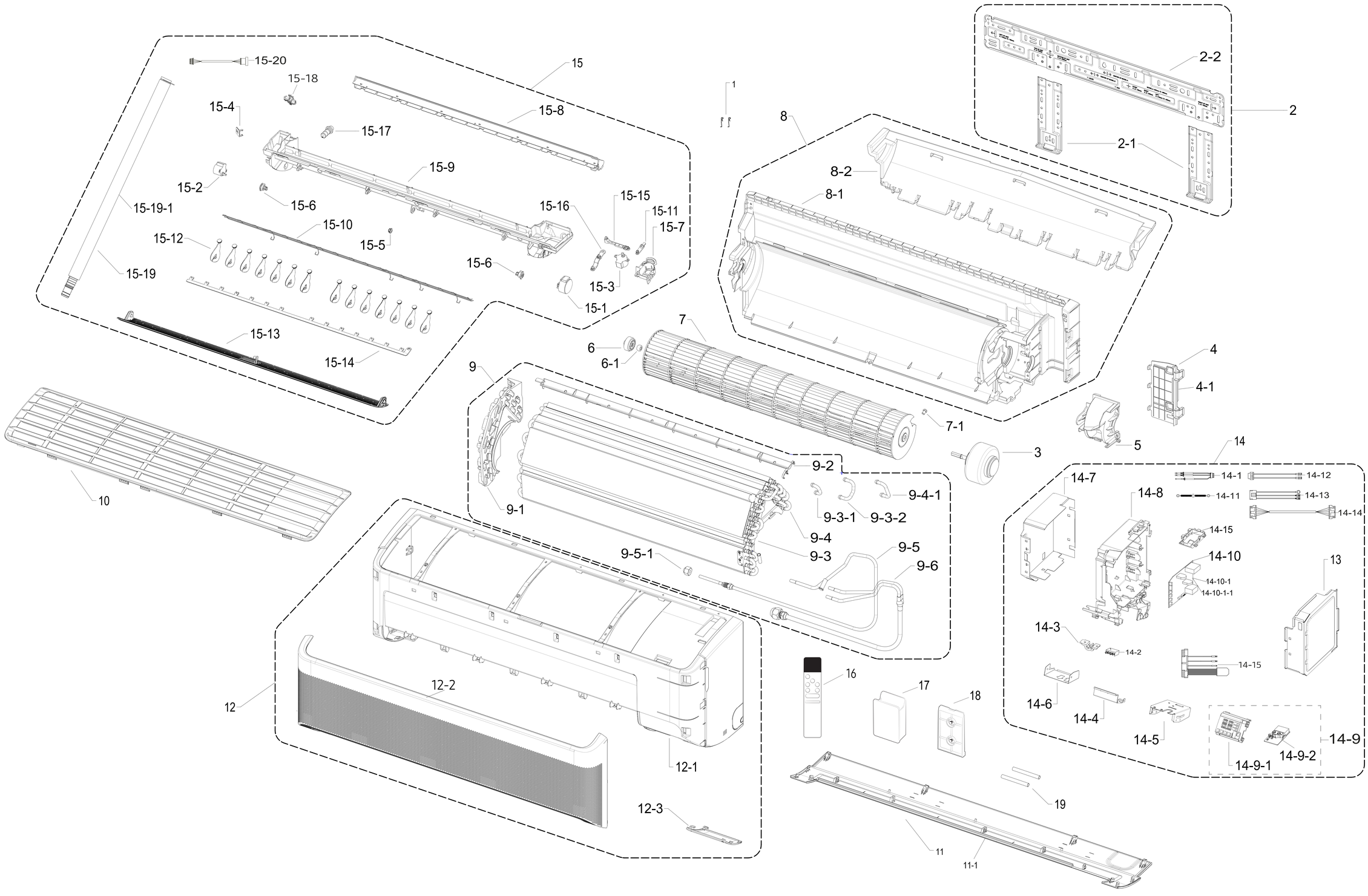

■ Parts List

AR60F09C1AWNEU

No.	Parts Code	Parts Description	Spec.	Quantity	SA/SNA
1	DB67-60030A	SPRING-SENSOR	WW2-PJT,STS301,0.4mm,-,T0.4,-,N(	2	SA
2	DB90-11453B	ASSY HANGER	AR9500T,QMD RAC 1, 2	1	SA
3	DB31-00636A	MOTOR BLDC FAN	RD-310-25-8A(AL),1500rpm,310V,1A	1	SA
4-1	DB61-07413B	HOLDER-PIPE	RAC QMD,PP,T2,D,BLACK,-,-,P-001S	1	SA
5	DB63-04215B	COVER MOTOR	PP+TD30%,T1.8,HB,BLACK,-,SSPP-T3	1	SA
6	DB94-00455B	ASSY-RUBBER BEARING	AR18MC5UDMCNNA,ASSY	1	SC
6-1	DB94-40007B	ASSY BEARING	G1-PJT,SSEC	1	SC
7	DB94-02933A	ASSY FAN CROSS	JUNGFRAU,SSEC	1	SA
8	DB94-07969A	ASSY BACK BODY	AR9500T,QMD RAC 2	1	SA
9	DB96-24852G	ASSY EVAP-MODULE	S2-1, MidEast,2R15(16)S, L660, HYDF	1	SA
9-5-1	DB60-30010A	FASTENER-NUT FLARE	-,BRASS,-,-,-,1/4"	1	SA
10	DB63-04208B	FILTER AIR-PRE MODULE	AR9500T, QMD RAC2,HIPS,-,DA WHI	1	SA
11	DB90-11932V	ASSY COVER-PANEL	QMD RAC2, WINDFREE,DB68-13349A	1	SA
11-1	DB63-04226A	COVER PANEL	AR9500T, QMD RAC2, WIND-FREE,H	1	SA
12	DB92-04822Q	ASSY PANEL FRONT	GEO,QMD RAC2, WIND FREE,White	1	SA
12-1	DB64-03462A	PANEL FRONT	AR9500T, QMD RAC2, WIND-FREE,H	1	SA
12-2	DB64-03471A	GRILLE INLET	AR9500T, QMD RAC2, WIND-FREE,,H	1	SA
12-3	DB93-17180S	ASSY DISPLAY	WHITE DISPLAY,No Hole, 1Coat, No	1	SA
13	DB61-07430A	PLATE CONTROL-RIGHT	AR9500T,GI-SGCC,T0.3	1	SA
14-2	DB37-00033A	TERMINAL BLOCK	DAF-4P-M,MELAMINE,300V,30A,58.	1	SA
14-8	DB61-07432D	CASE CONTROL-IN	AR9500T,ABS,-,L260,BLACK,-,VE-085	1	SA
14-9	DB92-05834B	ASSY PCB DISPLAY	HW,DISPLAY_DLX_TP1X,AR9500T,TI	1	SA
14-9-1	DB61-07899A	CASE-LED	AR9500T,HIPS,T1.8,L89.8,BLACK,-,HI	1	SA
14-10	DB92-05822A	ASSY PCB MAIN-IN	HW,MAIN-IN,RAC_PF1_23Y(B),AR95	1	SA
14-11	DB93-14245D	ASSY CONNECTOR WIRE-EARTH	1,1015,16,YEL/GRN,ST710095-3,ST71	1	SA
14-12	DB93-17055B	ASSY CONNECTOR WIRE-COMM	2,1007,22,RED,SMH250-03L/RED,179	1	SA
14-13	DB93-17169A	ASSY CONNECTOR WIRE-POWER	3,1015,18,BRN,YH396-05VR/BLU,175	1	SA
14-14	DB93-17178A	ASSY CONNECTOR WIRE-DC SIGNAL	14,2095,26,RED,SMH200-H14H3/WH	1	SA
14-15	DB32-00272A	SENSOR TEMP	L400,10kohm,3%,25C,Molding,AC,H	1	SA
15	DB94-07996A	ASSY TRAY DRAIN-MODULE	DA WHITE,QMD RAC 2,WIND FREE	1	SA
15-1	DB31-00371A	MOTOR STEP	-,DC12V,650gf.cm,E CLASS,1W,5.625	1	SC
15-2	DB31-00695A	MOTOR STEP 2P	STEP MOTOR,DC 12V,650gf.cm,E CL/	1	SA
15-3	DB31-00371C	MOTOR STEP	-,DC12V,650gf.cm,E CLASS,5.625deg	1	SA
15-4	DB61-06989A	HOLDER WIRE	F11-RAC,HIPS,-,W16.5,L17,BLACK,-,	1	SA
15-5	DB61-07418A	HINGE BLADE-A	AR9500,POM,T0.7,NATURAL,W10.1,	1	SA
15-6	DB61-07419A	HINGE BLADE-B	AR9500,POM,T0.7,NATURAL,W16.1,	2	SA
15-7	DB61-07440A	CASE MOTOR	QMD RAC,HIPS,T2,L53.2,BLACK,-,HI	1	SA
15-10	DB63-04250A	GUARD-SCREEN	AR9500T,MSWR,T1,BLACK,-,-,QMD2	1	SA
15-11	DB66-01727A	LINK BLADE-C	A3050, F-RAC-04,POM,NATURAL,-,L	1	SA
15-12	DB66-02038A	BLADE V	AR9500,PP,T1.6,BLACK,QMD RAC_N	14	SA
15-13	DB66-02043A	BLADE H	AR9500,ABS,T3.3,DA WHITE,-,SR-03	1	SA
15-14	DB66-02046A	LINK BLADE-A	AR9500,POM,L587.6,T2.5,BLACK,QM	1	SA
15-15	DB66-02048A	LINK BLADE-B	AR9500,POM,L63.9,T2.2,BLACK,QMI	1	SA
15-16	DB66-02049A	LINK BLADE-D	AR9500,POM,L59.1,T2.2,BLACK,-,LW	1	SA
15-17	DB73-00180A	RUBBER-CAP DRAIN	SS-PJT,EPDM,T3,-,PM GRAY,-,L 40,-	1	SA
15-19	DB94-02195B	ASSY DRAIN-HOSE	ALL,HOSE DRAIN L550mm	1	SA
15-19-1	DB67-00969A	HOSE DRAIN	VIVALDI,PP,-,L550,GRAY,-,-	1	SA
15-20	DB93-17189B	ASSY CONNECTOR WIRE	5,2095,26,RED,SMH200-H05H3/BLK,	1	SA
16	DB96-25924T	ASSY WIRELESS REMOCON	25. RAC,RS-9,ENGLISH,16.5*27.2, /	1	SA
17	DB61-08068A	HOLDER-REMOCON	AR-CH00,PC+ABS,T2.5,WHITE,-,HB,C	1	SA
18	DB61-08067A	HOLDER-LOW	AR-CH00,PC+ABS,T1,WHITE,-,HB,GC	1	SA
19	DB81-01328A	INSULATION	PO,T0.5,W8,L70,-,BLACK,-,-	2	SA

EXPLODED VIEW : OUTDOOR

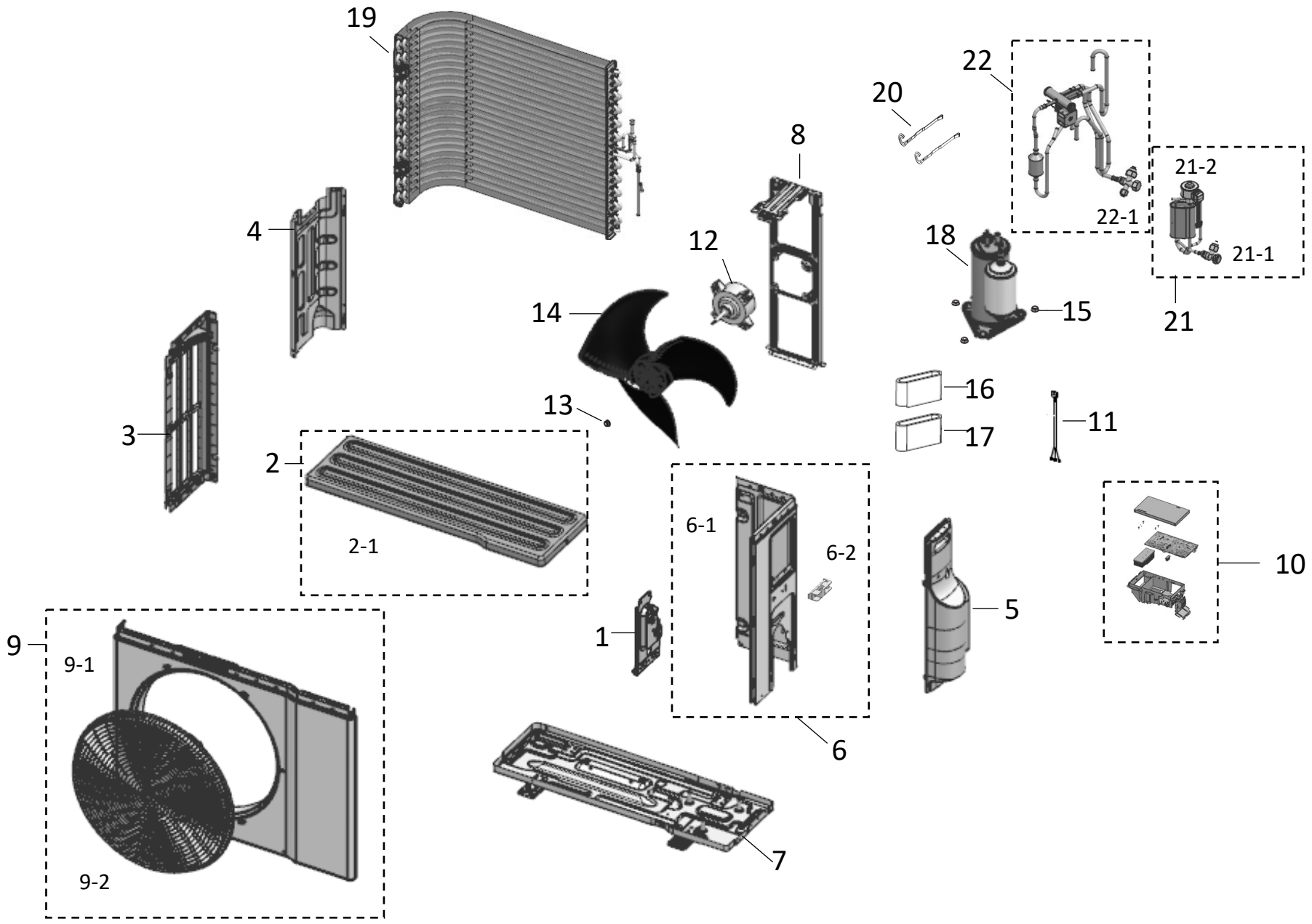

■ Parts List : AR60F09C1AWXEU

No	Code No.	Description	Specification	Q'TY	SA/SNA
1	DB61-04339E	BRACKET VALVE	N-WW / N-SI,SGMCC,T1,W94,-,-,-,anti-corrosion	1	SA
2	DB90-13480A	ASSY CABI TOP	RAC 85L	1	SA
2-1	DB64-03652A	CABINET TOP	RAC 85L,SGMCC,T0.6,EARTH BROWN,-,-	1	SNA
3	DB64-03653A	CABINET SIDE-LF	85L,PP+TD20%,T2.5,EARTH BROWN,-,TB52U	1	SNA
4	DB67-01891A	PARTITION	RAC 85L,GI-SGCC,T0.6,-,-,-	1	SNA
5	DB90-06381F	ASSY COVER-VALVE	NEW_WW,GY0108	1	SA
6	DB90-13481A	ASSY CABI SIDE-RIGHT	RAC 85L	1	SA
6-1	DB64-03651A	CABINET SIDE-RH	RAC 85L ODU,SGMCC,T0.6,EARTH BROWN,-,-	1	SNA
6-2	DB61-08329A	HOLDER WIRE	RAC,PA6,-,BLACK,-,V-0,KN1322V0	1	SA
7	DB90-13478A	ASSY BASE OUT	RAC 85L,EVA,T5,W30,L60	1	SA
8	DB90-13477A	ASSY BRACKET MOTOR	RAC 85L	1	SA
9	DB90-13482A	ASSY CABI FRONT	RAC 85L	1	SA
9-1	DB64-03650A	CABINET FRONT	RAC,SGMCC,T0.6,EARTH BROWN,-,-	1	SNA
9-2	DB63-04640A	GUARD FAN	85L,PP+TD20%,-,EARTH BROWN,-,TB52U	1	SA
10	DB92-05824A	ASSY PBA KIT-OUT	HW,OUTDOOR,AR9500T,INV_PF2_24S,18K,EMI,Standard	1	SNA
11	DB93-18076A	ASSY CONNECTOR WIRE-COMP	3,3343,16,RED,MG610876P/WHT,MG634833ST-001/WHT,350,CB-600/BLK,HS/YEL,275,70,-,-,COMP-WIRE,-	1	SA
12	DB31-00706A	MOTOR BLDC FAN	ZKFN-45-10-9L,1000RPM,310V,0.014A,45W,10Pole,CW	1	SA
13	DB60-00437A	FASTENER-NUT FLANGE	QMD,SWRCH10A,-,L6,-,GREEN,-	1	SA
14	DB67-01887A	FAN PROPELLER	RAC,PP+(GF+PD)40%,-,NH54G,OD400,BLACK,-,OD400	1	SA
15	DB60-30028A	NUT-FLANGE	SWRCH18A,ZPC(WHT),HWH,M8,P1.25/Washer Type(WP)	3	SA
16	DB63-04618B	FELT-COMP OUT	85ℓ,CLOTH/EVAR,T6.6,NATURAL,HBF,-,-,85ℓ, HP	1	SNA
17	DB63-04650A	FELT-COMP SIDE	85ℓ,EVAR/FELT,T6,natural,HBF,-,-,AIT LITE, 5102 COMP	1	SNA
18	UB1TC5102FJ6TS	RCP,COMP,RCP,F,R32		1	-
19	DB96-26983A	ASSY COND BENDING	85L,7PI 2R 24S,2-2 PATH	1	SA
20	DB81-00635A	SPRING ETC-SENSOR	DVM-SYSTEM,STS304,ID2.5,OD4.5,L44,T0.3,-,W2,NONE,-,-,-	2	SA
21	DB96-27111A	ASSY TUBE EEV	85L,7PI2R 2-2,EEV 1.3,SANHUAT01,HP	1	SA
21-1	DB62-09652A	VALVE SERVICE-SPINDLE	BRASS,FLARE,k type,R410A,9.52mm	1	SA
21-2	DB62-11421B	VALVE COIL EXPAN	DC12V,COIL,500mm,MOLDING,T-type	1	SA
22	DB96-27103A	ASSY TUBE 4WAY	85L,UB1TC5102FJ6,7W,3/8	1	SA
22-1	DB62-09654A	VALVE SERVICE-SPINDLE	BRASS,FLARE,k type,R410A,9.52mm	1	SA
23	6002-000481	SCREW-TAPPING	SWRCH18A,NI PLT,L12,M4,TH,+,NO,2S,ZnNi + TOP Coating	23	SA

EXPLODED VIEW : ASSY PBA KIT-OUT

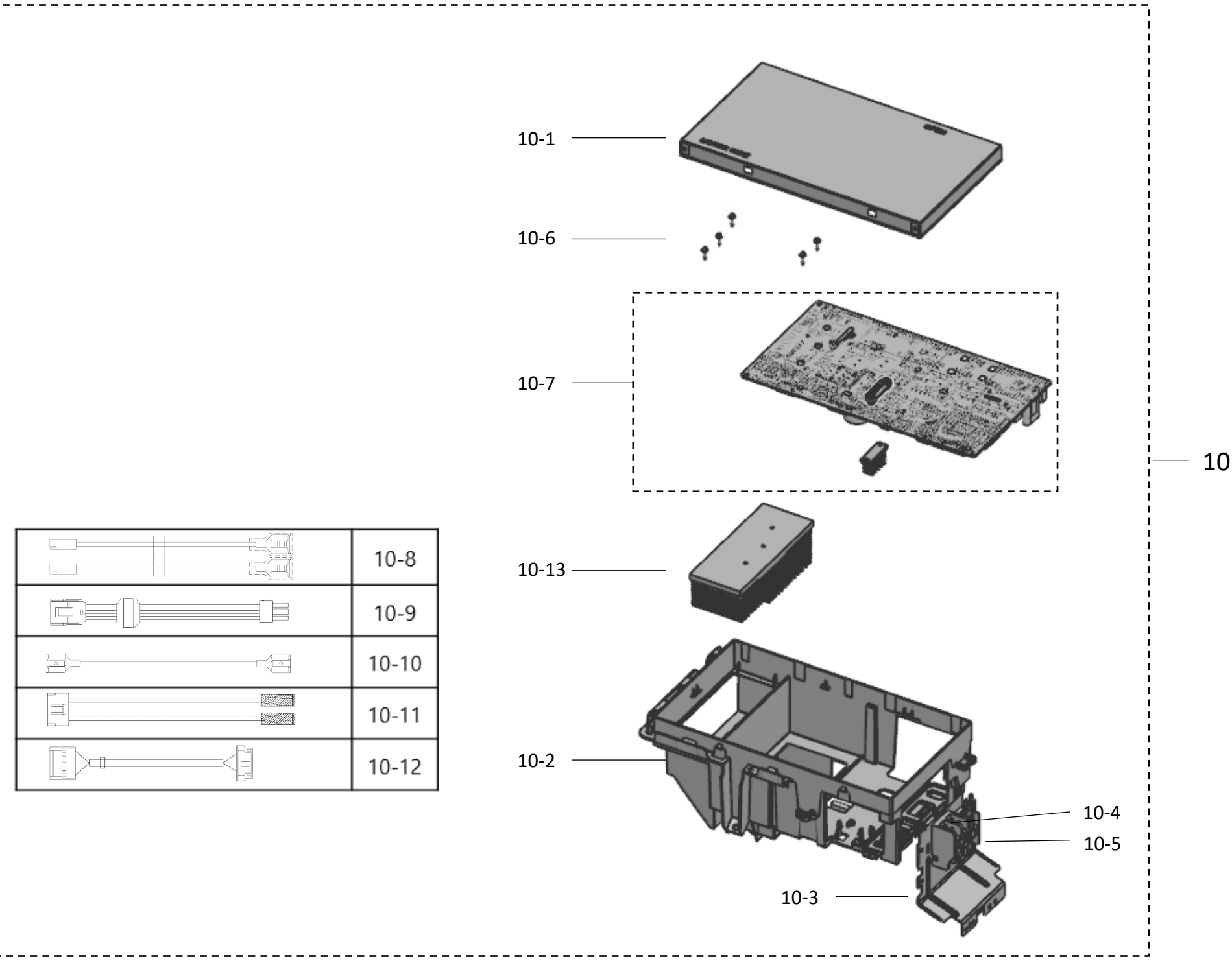

■ Parts List : AR60F09C1AWXEU

No	Code No.	Description	Specification	Q'TY	SA/SNA
10	DB92-05824A	ASSY PBA KIT-OUT	HW,OUTDOOR,AR9500T,INV_PF2_24S,18K,EMI,Standard	1	SNA
10-1	DB63-04643A	COVER CONTROL-OU	RAC 85L,GI-SGCC,T0.25,-,-,-,-,-	1	SNA
10-2	DB61-08334A	CASE CONTROL-OUT	RAC 85L,HIPS,T2,L262,BLACK,-,STYRON 6300,-	1	SNA
10-3	DB61-08331A	PLATE CONTROL	RAC 85L,GI-SGCC,T0.6,-,-,-	1	SNA
10-4	DB37-00036A	TERMINAL BLOCK	2P(4SCREW),MELAMINE,600V,30A,30.2X48X26.2mm,D4.4,NO,2	1	SA
10-5	DB65-00274A	TERMINAL BLOCK	TERMINAL BLOCK,Polycarbonate, Phenol,AC300V,20A,22x36.4x24.2mm,0mm,D-,-,2P,-,B_Type	1	SA
10-6	DB91-00306A	SCREW-MACHINE	SWRCH10A,ZPC(WHT),L16,M3,PH,+,WSP,2,BLDC INV	5	SA
10-7	DB92-05826A	ASSY PCB INVERTER	HW,INVERTER,INV_PF2_24S,EMI,18K,260X160mm,220V-240V,18V/12V/5V,OUTDOOR,Y,SMPS,Standard	1	SA
10-8	DB93-18070A	ASSY CONNECTOR WIRE-POWER	2,1015,16,BRN,MG630591T/WHT,ST730620-3,300,-,-,-,-,PBA-TB,AR9500T,AR9500T,INV_PF2_24S,-	1	SA
10-9	DB93-09497B	ASSY CONNECTOR WIRE	3,1015,16,RED,MG625040/WHT,DBT061-03P/WHT,-,200,-,-,-,-,PBA-COMP,AQV09PSBTX2XAZ,-	1	SA
10-10	DB93-18077A	ASSY CONNECTOR WIRE-EARTH	1,1015,18,YEL/GRN,ST730711-3,ST730711-3,300,PBA-EARTH,-	2	SA
10-11	DB93-16402A	ASSY CONNECTOR WIRE-COMM	2,1007,22,RED,YH396-02VR/RED,175020-1,-,250,PVC/BLK,200,-,-,PBA-T/B,RAC,-	1	SA
10-12	DB93-18071A	ASSY CONNECTOR WIRE-MOTOR	3,1569,22,RED,YH396-05PLZ/WHT,SMH250-05LZ/BLK,200,-,-,-,-,PBA-MOTOR,AR9500T,AR9500T,INV_PF2_24S,-	1	SA
10-13	DB62-13720A	HEAT SINK	AR9500T,Al,T3,W58,L141,BLACK,H47,-,-,Soft Anodizing BLK	1	SNA