1. Freezer

Exploded View

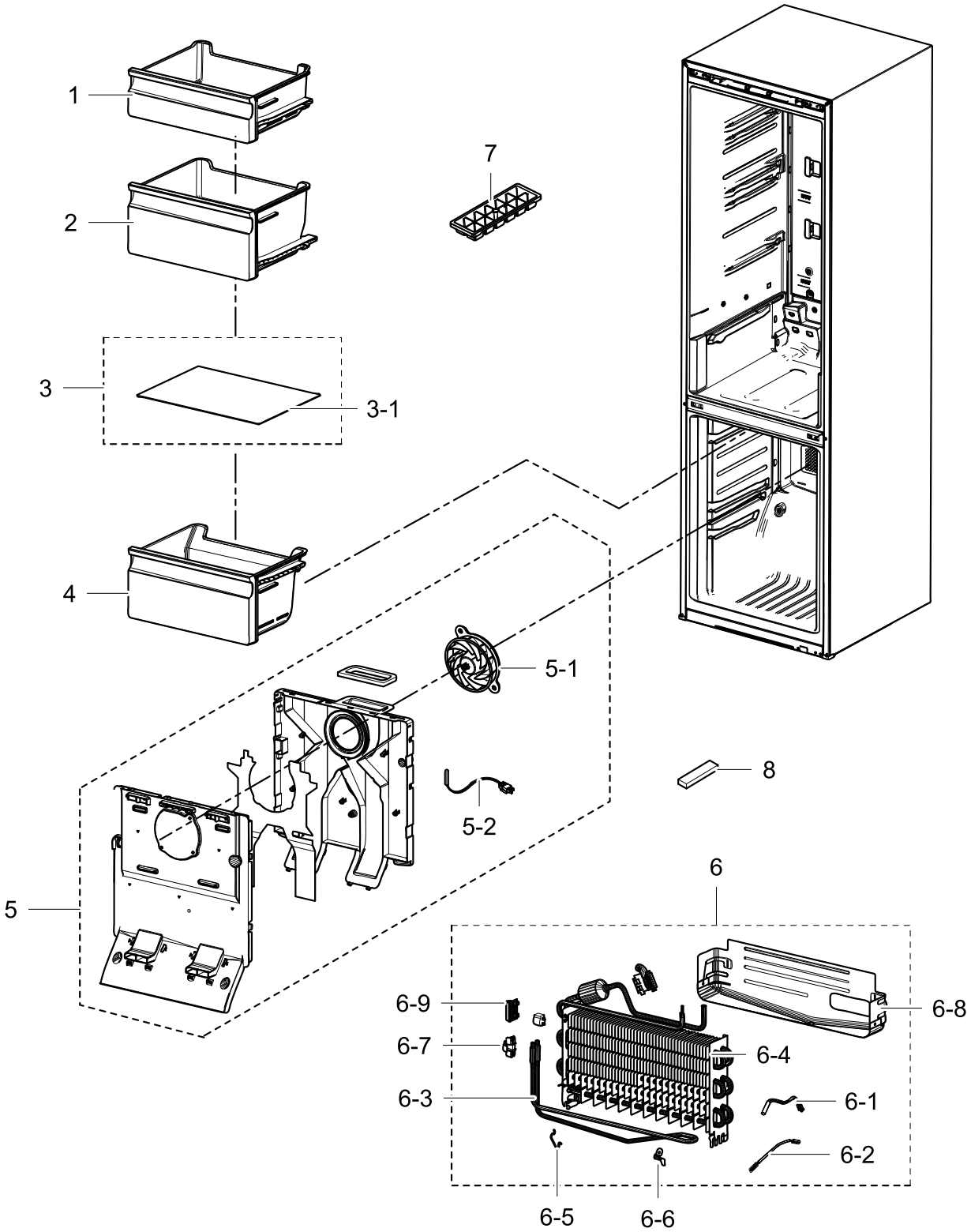

Copyright© 1995-2017 SAMSUNG. All rights reserved.

Parts List

No.	Lvl.	Loc.	Material Code	Description & Specification	SNA	Qty.
1	2	M0121	DA97-13480A	ASSY TRAY-FRE UPP; 3050,W479.1,L394.3	SA	1
2	2	G0268	DA97-13472A	ASSY TRAY-FRE MID; 3050,W466.3,H227.0	SA	1
3	2		DA97-15985A	ASSY SHELF GLASS-FRE; RL31/29,NO TRIMS	SA	1
3-1	3	A0720	DA67-03645N	GLASS-SHELF FRE; RL310/290,TEMPERED GLASS	SNA	1
4	2	G0267	DA97-13475A	ASSY TRAY-FRE LOW; 3050,W466.2	SA	1
5	2	M0303	DA97-13570A	ASSY COVER EVAP-FRE; 3050,NATURAL	SA	1
5-1	3		DA31-00334A	MOTOR BLDC FAN; 12035GE-12M-YT-F1,1775 7	SA	1
5-2	3	A1018	DA32-10105X	SENSOR TEMP; PX-41C,502AT,DKST1329GW,QUEE	SA	1
6	2	A0163	DA96-01009C	ASSY EVAP-FRE; 3050-BMF	SA	1
6-1	3	A1018	DA32-00006D	SENSOR TEMP; PX-41C,502AT,DKST1329GW,EXPO	SNA	1
6-2	3	A1008	DA47-00301D	THERMO FUSE-ASSY; AC250V,10A,109~110S	SA	1
6-3	3	A0921	DA47-00460A	HEATER METAL SHEATH; AC230V,3050 BMF, 352	SA	1
6-4	3	A0742	DA59-00555A	EVAP FRE; FIN TUBE,AL,3050-PJT	SNA	1
6-5	3		DA61-02526A	FIXER-EVAP FRE,SUB; NEXT,AL,2.0,-,-	SNA	1
6-6	3	M9010	DA61-03644A	PLATE-EVAP HEATER; AW-PJT,Al,T0.7	SA	1
6-7	3	G0205	DA61-07410A	FIXER-HEATER FRE; NW2,PP,NATURAL,BJ750	SA	1
6-8	3	A0754	DA61-08936A	PLATE-DRAIN; 3050,GI-SGCC,-,T0.3	SA	1
6-9	3	A0744	DA61-07411A	FIXER-FUSE; NW2,PP,NATURAL,BJ750	SA	1
7	2	A0582	DA67-40146B	TRAY-ICE; SR-1500,PP,HB,COOL WHITE	SA	1
8	2		DA72-60040W	SEAL-CUTT RUBBER; TD-PJT,BUTYL RUBBER,BLA	SA	3

Copyright© 1995-2017 SAMSUNG. All rights reserved.

2. Refrigerator

Exploded View

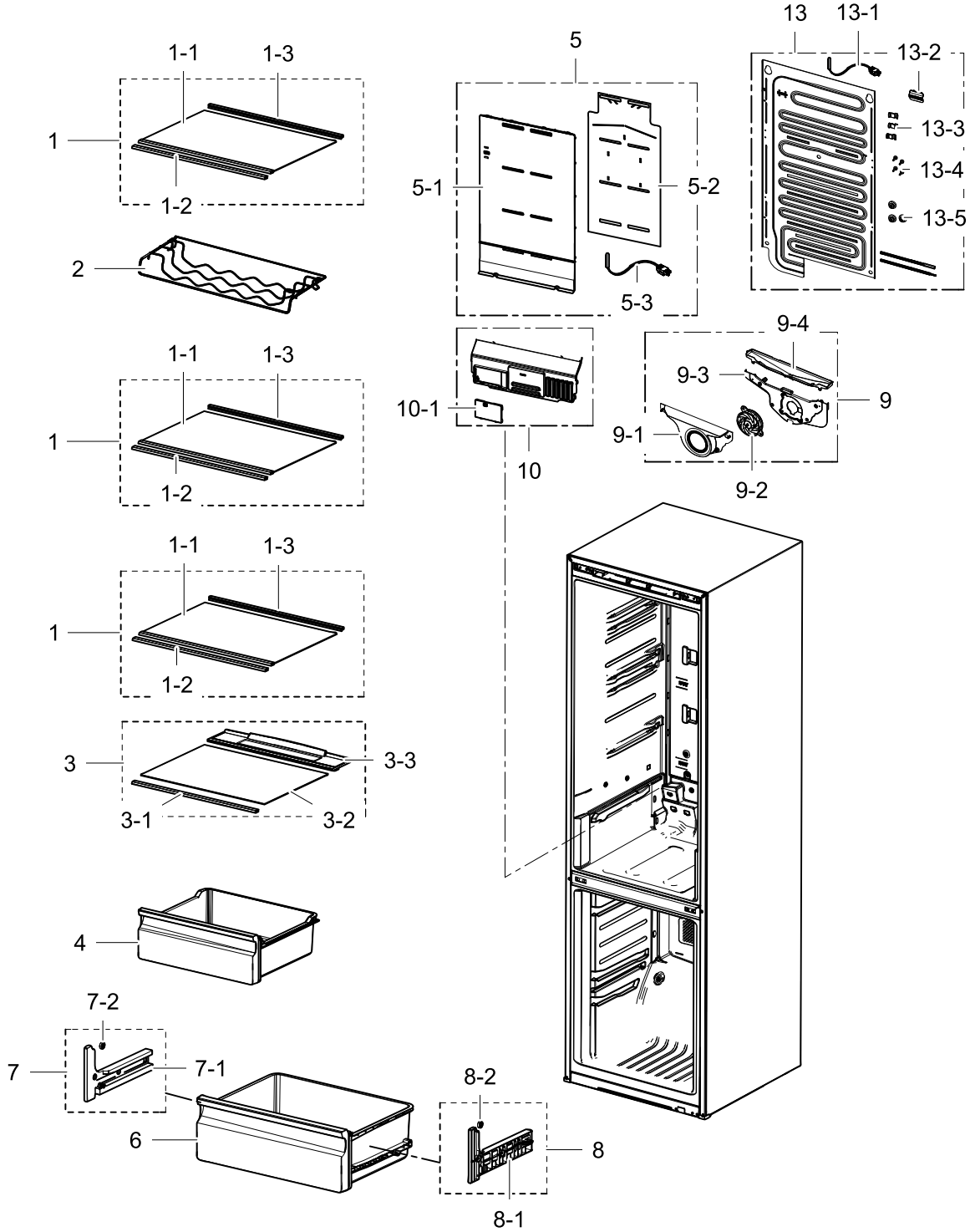

Copyright© 1995-2017 SAMSUNG. All rights reserved.

Parts List

No.	Lvl.	Loc.	Material Code	Description & Specification	SNA	Qty.
1	2		DA97-13502G	ASSY SHELF GLASS-REF; RL31/29 BEST,SILVER	SA	3
1-1	3	A0720	DA67-03645K	GLASS-SHELF REF; RL310/290,TEMPERED GLASS	SNA	3
1-2	3		DA64-04407A	TRIM SHELF-FRONT; RT320,HIPS,HIPS+SOFT UR	SA	3
1-3	3		DA64-04395A	TRIM SHELF-REAR; RT320,HIPS,S834S1,COOL W	SNA	3
2	2		DA75-00313C	RACK WINE; 3050-BMF,MSWR70,electroplate	SA	1
3	2		DA97-13550C	ASSY SHELF VEG; RB5000,SILVER TRIM	SA	1
3-1	3		DA64-04407C	TRIM SHELF-FRONT VEG; RL31/29,HIPS,HIPS+S	SNA	1
3-2	4	A0720	DA67-03645M	GLASS-SHELF VEG; RL310/290,TEMPERED GLASS	SNA	1
3-3	3		DA67-03652A	SHELF-VEG; RL310/290,ABS,COOL WHITE	SNA	1
4	2	M0236	DA97-13474A	ASSY CASE-VEG LOW; 3050,W479.2,H175,6	SA	1
5	2	Z1177	DA97-15459A	ASSY COVER EVAP-REF; RB5000J,A+++	SA	1
5-1	3		DA63-08033A	COVER EVAP-REF; RB5000J,PP,HB,COOL WHITE,	SNA	1
5-2	3		DA62-04514A	INSULATION COVER EVAP-REAR; RB5000J,PS FO	SNA	1
5-3	3	A1018	DA32-00011W	SENSOR TEMP; PX-41C,MT-PJT,-40~1105V,	SA	1
6	2		DA97-13473B	ASSY CASE VEG-UP; 3050-2M	SA	1
7	2	M0110	DA97-13599A	ASSY RAIL-VEG L; 3050_BMF	SA	1
7-1	3		DA61-09032A	RAIL-VEG L; 3050,HIPS,COOL WHITE,454N	SNA	1
7-2	3		DA66-10104A	ROLLER-FRE; POM,-,-,D22,-,-,	SC	1
8	2	M0111	DA97-13598A	ASSY RAIL-VEG R; 3050_BMF	SA	1
8-1	3		DA61-09037A	RAIL-VEG R; 3050,HIPS,COOL WHITE,454N	SNA	1
8-2	3		DA66-10104A	ROLLER-FRE; POM,-,-,D22,-,-,	SC	1
9	2		DA97-15460A	ASSY CASE MOTOR-REF; RB5000J,A+++	SA	1
9-1	3		DA61-10409A	CASE MOTOR-REF; RB5000J,HIPS,NATURAL,454N	SA	1
9-2	3		DA31-00334A	MOTOR BLDC FAN; 12035GE-12M-YT-F1,1775 7	SA	1
9-3	3		DA61-10405A	BRACKET MOTOR-REF A; RB5000J,HIPS,NATURAL	SA	1
9-4	3		DA61-10411A	PLATE DRAIN-REF; HIPS,NATURAL,HB,454N	SA	1
10	2	A0678	DA97-15509A	ASSY COVER DAMPER-REF; RB7000J,RB5000J	SA	1
10-1	3		DA63-06337A	COVER-CONV MULTI; GRAND CRU,PP,HB,COOL WH	SA	1
13	2	A0184	DA96-01112A	ASSY EVAP-REF; RB5000J,ROLL BOND	SA	1
13-1	3	A1018	DA32-00011X	SENSOR TEMP; PX-41C,502AT,DKST1329,MT-PJT	SA	1

Copyright© 1995-2017 SAMSUNG. All rights reserved.

No.	Lvl.	Loc.	Material Code	Description & Specification	SNA	Qty.
13-2	3		DA61-10518A	FIXER SENSOR; RB5000J,PP,T0.5,NATURAL,EP4	SA	1
13-3	3		DA61-10519A	FIXER WIRE; RB5000J,PP,NATURAL,EP448T	SA	3
13-4	3	M2002	DA63-40167A	GROMMET-COVER CHIL; SI,L16,WHITE	SA	4
13-5	3	M0181	DA63-01563A	GROMMET-SUB COND; BBC-PJT,NBR,-	SA	3

Copyright© 1995-2017 SAMSUNG. All rights reserved.

3. cabinet

Exploded View

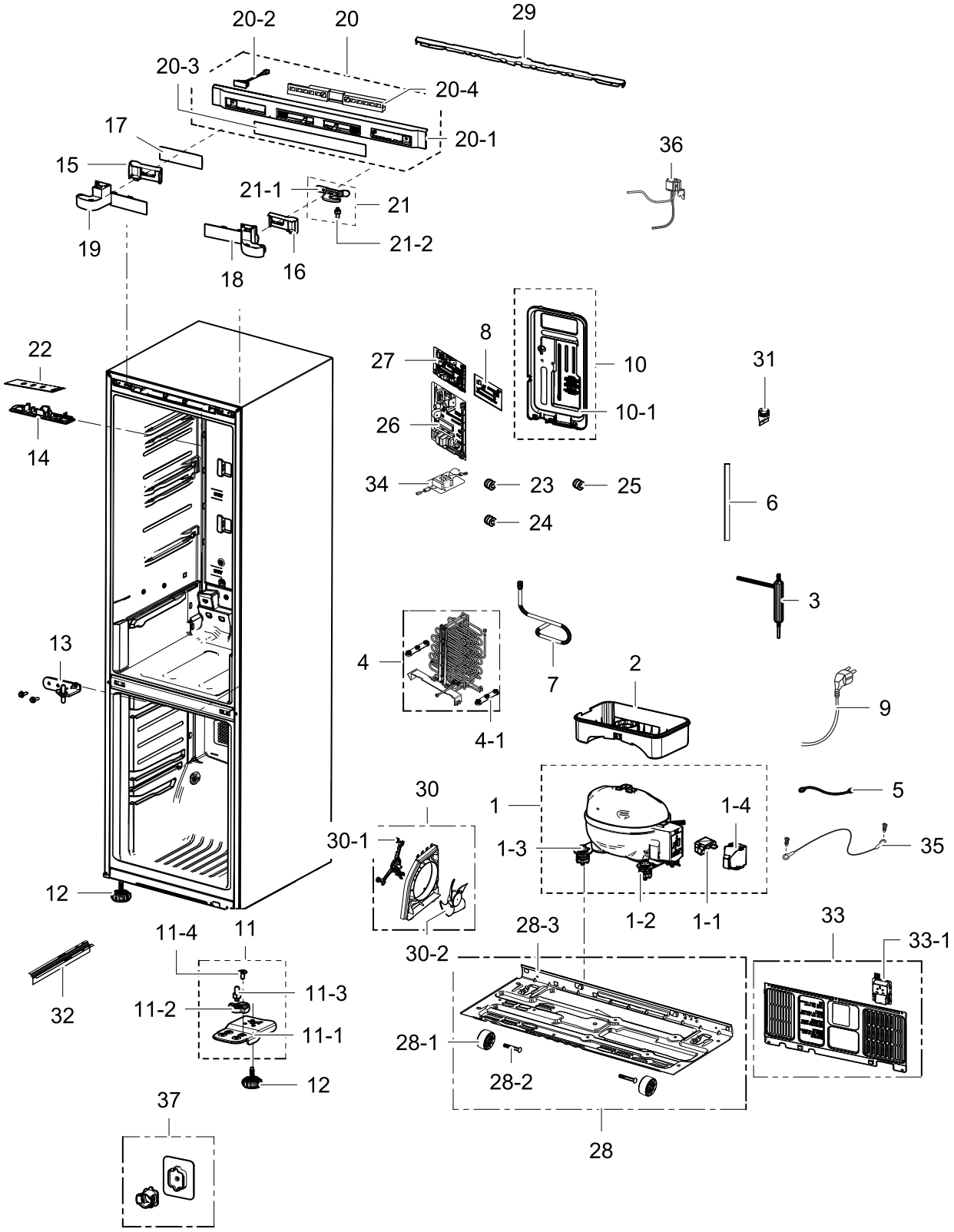

Copyright© 1995-2017 SAMSUNG. All rights reserved.

Parts List

No.	Lvl.	Loc.	Material Code	Description & Specification	SNA	Qty.
1	2		NC4MVA1ALP/TT1	COMPRESSOR,115/220V; COMPRESSOR,115/220V		1
1-1	3	A0575	DA34-00004D	RELAY PROTECTOR O/L; 4TM445PHBYY-82, 125	SA	1
1-2	3	Z1112	DA63-02617A	GROMMET COMP; USP05,EPDM,OD27.0,BLACK	SA	4
1-3	3	A0564	DA60-20008A	BOLT-HEX; M6,L42.6(28.1),ZPC(SILVER), D9.	SA	4
1-4	3	Z1032	DA63-06122A	COVER RELAY; MSV,MPPO,T2.0,5V-A,BLACK,M-H	SA	1
2	2	A0529	DA97-15474A	ASSY TRAY DRAIN WATER; RB5000J,STEP VALVE	SA	1
3	2	A0669	DA62-04309A	DRYER; C1220T-H,137,SINGLE MOUTH,15.8,9g	SA	1
4	2	G0270	DA97-12330B	ASSY PIPE-CONDENSER; GRAND CRU,SPIRAL, AL	SA	1
4-1	3	M0181	DA63-40128A	GROMMET-SUB COND; -,NBR,-,-,-,-,-,-,DARK-	SA	2
5	2	A0562	DA39-20389A	ASSY WIRE HARNESS-EARTH; ALL,FREE VOLT,UL	SA	1
6	2	M0203	DA62-02982C	PIPE-CONNECT DISC A; C1220T-1/2H,OD6.35,L	SA	1
7	2		DA62-04537A	PIPE SUCTION-CONNECT; RB7000J,Cu,C1220T-O	SA	1
8	2		DA92-00701A	ASSY PCB SUB; RELAY PBA,RB5000J, BK60,60.	SA	1
9	2	A0273	3903-000794	CBF-POWER CORD; AT,E.U,EU3F,3C,250V,16A,B	SA	1
10	2	M0306	DA97-13562A	ASSY COVER-PCB PANEL; 290, 310,GI,3050	SA	1
10-1	3		DA63-07420A	COVER-PCB PANEL; BMF,GI-SGCC,T0.5,3050	SNA	1
11	2	A0515	DA97-13557B	ASSY HINGE LOW; 3050(BMF)	SA	1
11-1	3	A0247	DA61-08990A	HINGE-LOW; 3050PJ,PO-SPHC,T3.0,LMF	SA	1
11-2	3	A0516	DA61-08991B	GUIDE-AUTO CLOSE; 3050PJ,PA66,HB,HG-0760G	SA	1
11-3	3	A0518	DA66-00385A	SHAFT-HINGE; CORE,SWRCH10A,NATURAL,ZPC3(W	SA	1
11-4	3	A0848	DA81-01532A	SCREW-MACHINE; CH,+,M5,L12.7,ZPC(WHT),SWR	SA	1
12	2	Z1128	DA61-07546B	LEG-FRONT; GRAND CRU,PP,BLACK,RM60,PP Scr	SA	2
13	2	A0513	DA97-13564A	ASSY HINGE MID; 3050_BMF	SA	1
14	2	A0490	DA63-07368A	COVER-LAMP; 3050,GPPS,T2.0,TP BLUE,G116HV	SA	1
15	3		DA67-03988A	CAP SPACE-DOOR LEFT; RB5000J,ABS,T1.8,HB,	SA	1
16	2		DA67-03989A	CAP SPACE-DOOR RIGHT; RB5000J,ABS,T1.8,HB	SA	1

Copyright© 1995-2017 SAMSUNG. All rights reserved.

No.	Lvl.	Loc.	Material Code	Description & Specification	SNA	Qty.
17	2		DA61-08932A	CAP CONTROL-PANEL; 3050,ABS,HB,HG-0760GP,	SA	1
18	2		DA63-08035A	COVER WIRE-HINGE RIGHT; RB5000J,ABS,HB,IN	SA	1
19	3		DA63-08034A	COVER WIRE-HINGE LEFT; RB5000J,ABS,HB,INO	SA	1
20	2	G0022	DA97-13131A	ASSY COVER CONTROL-PANEL; 3050PJT,ASSY,IN	SA	1
20-1	3	A0506	DA63-07352A	COVER-CONTROL PANEL; 3050,ABS,HB,INOX GRA	SA	1
20-2	3	G0068	DA34-00043A	SWITCH REED; UL1007 AWG 22,100mm,DEM1-B50	SA	1
20-3	3	A0566	DA64-04355A	INLAY-DISPLAY; RB B330,PC,T0.38,BLACK	SA	1
20-4	3		REF-PBA1D0048	3050 DISPLAY INNER BMF TSE; 3050 DISPLAY INNER BMF TSE		1
21	2	A0705	DA97-13567A	ASSY HINGE UPP; 3050_BMF	SA	1
21-1	3	A0510	DA97-13566A	ASSY HINGE UPP-SUB; 3050_BMF	SA	1
21-2	3	A0518	DA66-00385A	SHAFT-HINGE; CORE,SWRCH10A,NATURAL,ZPC3(W	SA	1
22	2	G0090	DA41-00519R	ASSY LAMP LED; 3ea,CEM-1,65*10,WHITE,SMAW	SA	1
23	2		DA60-00279A	FITTING-LOKRING 16; GRAND/SAM/HERMES,11SM	SA	1
24	2		DA60-00280A	FITTING-LOKRING 33; SUM23,33	SA	1
25	2		DA60-00281A	FITTING-LOKRING 43; GRAND/SAM/HERMES,11SM	SA	1
26	1	A0952	DA92-00700A	ASSY PCB MAIN; TWIN COOLING,RB5000J, RB70	SA	1
27	1	M0309	DA92-00228E	ASSY PCB INVERTER; INVERTER,ARAM,148x98.5	SA	1
28	2	A0526	DA97-15476A	ASSY CHASSIS COMP; BK(7000,8000),C-FAN,CO	SA	1
28-1	3	A0527	DA61-06202A	CASTER-REAR; GRAND-CRU,PP,NATURAL	SA	2
28-2	3	A0861	DA60-90146A	PIN-CASTER; SR-289-429,MSWR10,OD6.0,L38,Z	SA	2
28-3	3		DA97-15648A	ASSY CHASSIS SUB COMP; BK(7000,8000),SUB	SNA	1
29	2		DA63-08030A	COVER WIRE-DOOR; RB5000J,ABS,T1.8,HB,INOX	SA	1
30	2	M0116	DA97-15301A	ASSY SUPPORT-CIRCUIT MOTOR; GRAN CRU,4 BL	SA	1
30-1	3	A0218	DA63-04118A	GROMMET-MOTOR; GUGGENHEIM,SI,ID8,OD18,WHI	SA	3
30-2	3		DA31-00278B	MOTOR BLDC FAN; G1538S12D1-SC-TTL-EM,1230	SA	1

Copyright© 1995-2017 SAMSUNG. All rights reserved.

No.	Lvl.	Loc.	Material Code	Description & Specification	SNA	Qty.
31	3	G0202	DA63-00246B	GROMMET-DRAIN HOSE; CORE-PJT,NBR,-,-,-,-,	SA	2
32	2	M0296	DA64-02605C	TRIM-BLADE; GRAND CRU,PVC,SHGS-L130-67-01	SA	2
33	2	M0076	DA97-15477A	ASSY COVER COMP; BK65 (RB7000J)	SA	1
33-1	2		DA61-09324A	HOLDER WIRE; 3050,PP,BLACK,RM60,PP SCRAP	SA	1
34	2	M0489	DA27-00032E	COIL FILTER; 14mH,82*60	SA	1
35	2	A0562	DA39-00429D	ASSY WIRE HARNESS-EARTH; ALL,FREE VOLT,UL	SA	1
36	2		DA97-08630B	VALVE STEP; DC12V,MODULE,80mm,2WAY,RIGHT	SA	1
37	3		DA97-10898B	ASSY-GROMMET FIXER; POLARIS,FRPP	SA	2

Copyright© 1995-2017 SAMSUNG. All rights reserved.

4. Door

Exploded View

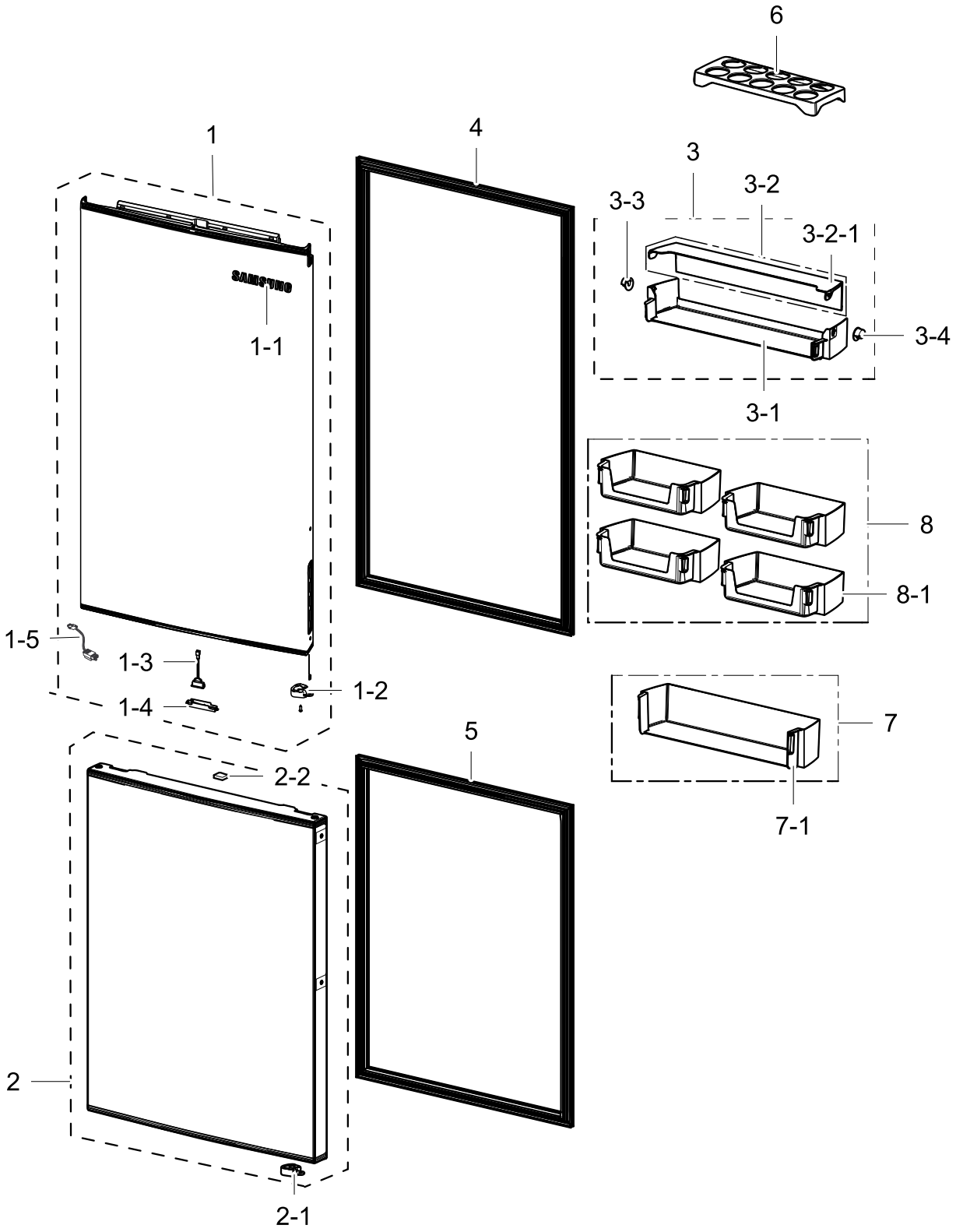

Copyright© 1995-2017 SAMSUNG. All rights reserved.

Parts List

No.	Lvl.	Loc.	Material Code	Description & Specification	SNA	Qty.
1	2	Z1100	DA91-04332D	ASSY DOOR FOAM-REF; RB37*,METAL GRAPHITE,	SA	1
1-1	3	M0196	DA64-04020C	MASCOT; ALL,NI,-,T0.06,L80	SA	1
1-2	5		DA66-01011B	LEVER-AUTO CLOSE; 3050PJ,POM,EBONY BLACK,	SA	1
1-3	5		DA34-00043J	SWITCH REED; UL1007 AWG 22,50mm,DEM1-B503	SA	1
1-4	5	G0271	DA67-02385L	CAP-REED SWITCH; SVETA-PJT,PP,-,NOBLE GRA	SA	1
1-5	5		DA96-01115B	ASSY WIRE HARNESS-DOOR; BMF,12VDC,ALL,UL,	SA	1
2	2	M0063	DA91-04336P	ASSY DOOR FOAM-FRE; RB37*,SA COLOR,RECESS	SA	1
2-1	5		DA66-01011B	LEVER-AUTO CLOSE; 3050PJ,POM,EBONY BLACK,	SA	1
2-2	5	A0534	DA61-03769B	MAGNET; SVETA,MAGNET,T5,W15,L18	SA	1
3	2	A0636	DA97-15734A	ASSY GUARD DAIRY; 3050,hot stamping	SA	1
3-1	3		DA63-07404A	GUARD-DAIRY CASE; 3050,GPPS,TP BLUE,HB,16	SA	1
3-2	3		DA97-15731A	ASSY GUARD DAIRY-COVER; 3050,hot stamping	SA	1
3-2-1	4		DA63-08119A	COVER DAIRY; RB5000J,GPPS,T3.0,TP BLUE,16	SA	1
3-3	3		DA67-02920A	CAP-HINGE DAIRY R; HERMES,POM,NTR	SA	1
3-4	3		DA67-02921A	CAP-HINGE DAIRY L; HERMES,POM,NTR	SA	1
4	2		DA97-08977A	ASSY GASKET-REF; 3050,L1103 W539.5,GRAY,P	SA	1
5	2		DA97-09036A	ASSY GASKET-FRE; 3050,L708.5 W539.5,GRAY,	SA	1
6	2	A0656	DA63-06221A	TRAY EGG; GRAND-CRU,GPPS,TP BLUE,165N,HI-	SA	1
7	2	A0167	DA97-15730A	ASSY GUARD BOTTLE; 3050,hot stamping	SA	1
7-1	3	A0151	DA63-08118A	GUARD BOTTLE; RB5000J,GPPS,T3.0,TP BLUE	SA	1
8	2		DA97-15728A	ASSY GUARD VARIETY; 3050,hot stamping	SA	4
8-1	3	A0153	DA63-08117A	GUARD VARIETY; RB5000J,GPPS,T3.0,TP BLUE,	SA	4

Copyright© 1995-2017 SAMSUNG. All rights reserved.