1. RB31FERNCSA/EF_Freezer

Exploded View

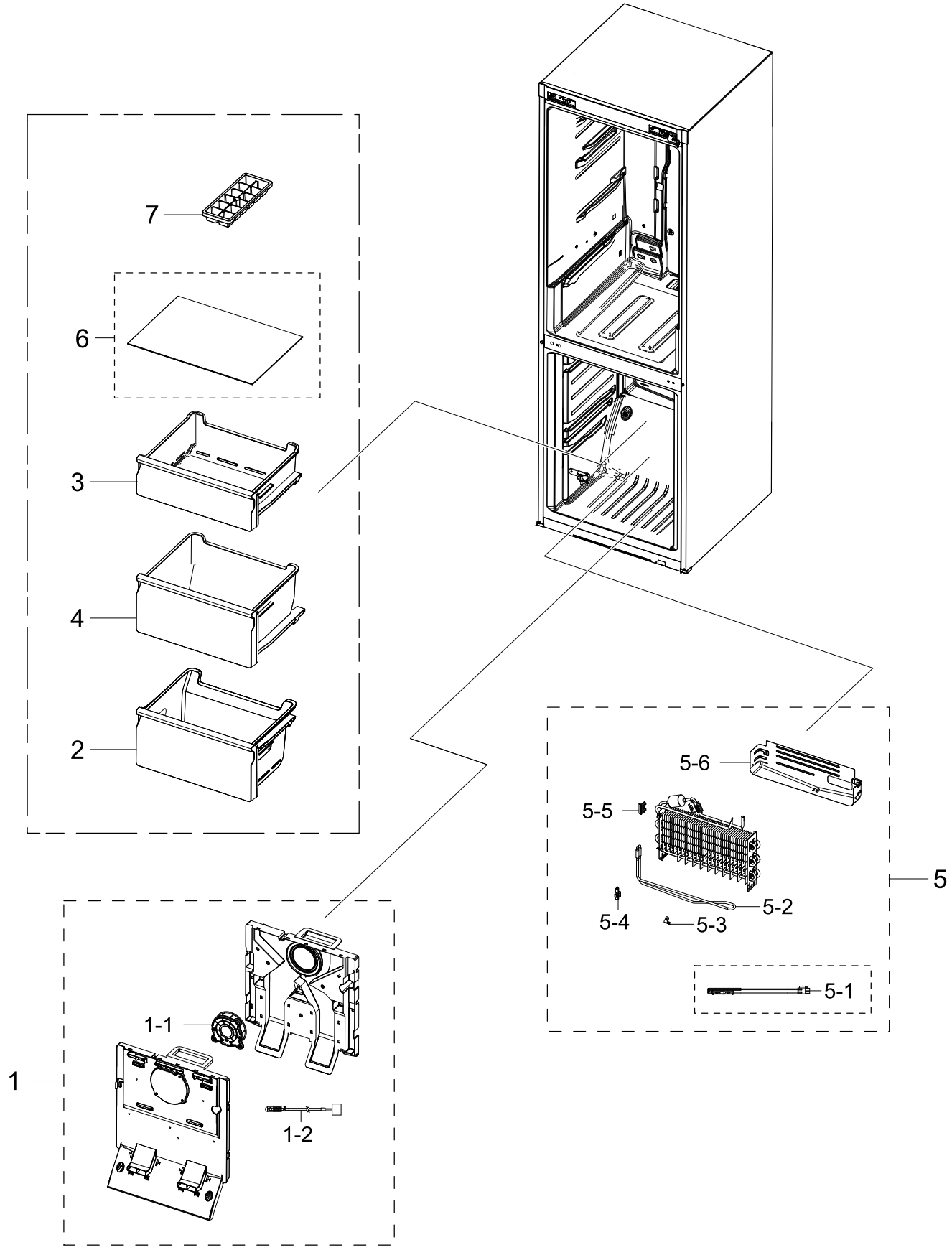

Copyright© 1995-2018 SAMSUNG. All rights reserved.

Parts List

No.	Lvl.	Loc.	Material Code	Description & Specification	SNA	Qty.
1	2	M0303	DA97-19096A	ASSY COVER EVAP-FRE; 3050-BMF,No SEAL	SA	1
1-1	3		DA31-00334C	MOTOR BLDC FAN; 12035GE-12M-YT,1775 7%,1	SA	1
1-2	3	A1018	DA32-10105X	SENSOR TEMP; PX-41C,502AT,DKST1329GW,QUEE	SA	1
2	2	G0267	DA97-13475A	ASSY TRAY-FRE LOW; 3050,W466.2	SA	1
3	2	M0121	DA97-13480A	ASSY TRAY-FRE UPP; 3050,W479.1,L394.3	SA	1
4	2	G0268	DA97-13472A	ASSY TRAY-FRE MID; 3050,W466.3,H227.0	SA	1
5	2	A0163	DA96-01009C	ASSY EVAP-FRE; 3050-BMF	SA	1
5-1	3	A1008	DA47-00301D	THERMO FUSE-ASSY; AC250V,10A,109~110S	SA	1
5-2	3	A0921	DA47-00460A	HEATER METAL SHEATH; AC230V,3050 BMF, 352	SA	1
5-3	3	M9010	DA61-03644A	PLATE-EVAP HEATER; AW-PJT,Al,T0.7	SA	1
5-4	3	G0205	DA61-07410A	FIXER-HEATER FRE; NW2,PP,NATURAL,BJ750	SA	1
5-5	3	A0744	DA61-07411A	FIXER-FUSE; NW2,PP,NATURAL,BJ750	SA	1
5-6	3	A0754	DA61-08936A	PLATE-DRAIN; 3050,GI-SGCC,T0.3	SA	1
6	2		DA97-15985A	ASSY SHELF GLASS-FRE; RL31/29,NO TRIMS	SA	1
7	2	A0120	DA67-40146B	TRAY ICE; SR-1500,PP,HB,COOL WHITE	SA	1

Copyright© 1995-2018 SAMSUNG. All rights reserved.

2. Refrigerator

Exploded View

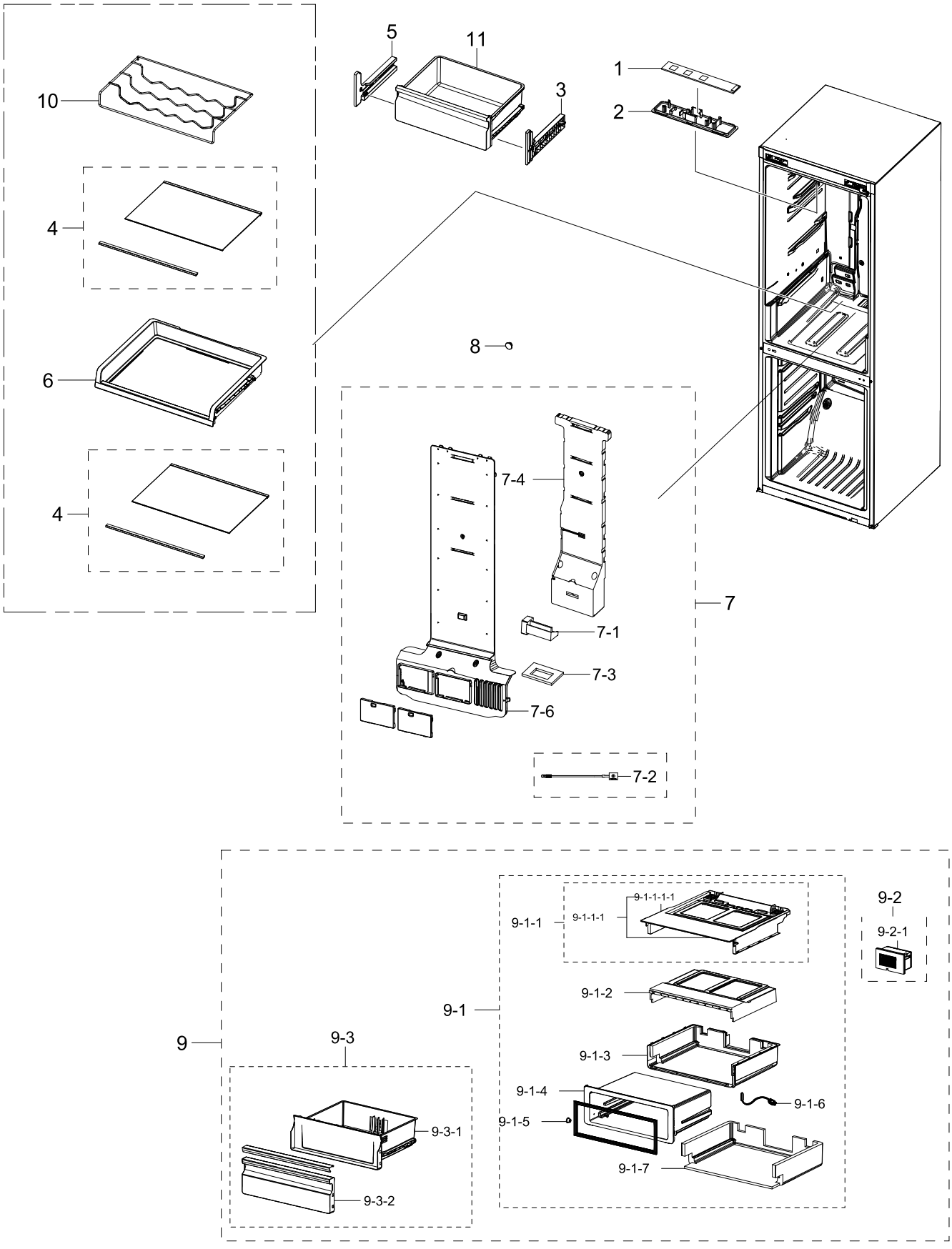

Copyright© 1995-2018 SAMSUNG. All rights reserved.

Parts List

No.	Lvl.	Loc.	Material Code	Description & Specification	SNA	Qty.
1	2	G0090	DA41-00519R	ASSY LAMP LED; 3ea,CEM-1,FR-4 65*10*1.6T,	SA	1
2	2	A0280	DA63-08570A	COVER LAMP; 3050-BMF,GPPS,T2,TP BLUE	SNA	1
3	2	M0111	DA97-13598A	ASSY RAIL-VEG R; 3050_BMF	SA	1
4	2		DA97-13502D	ASSY SHELF GLASS-REF; RL31/29,COOL WHITE	SA	2
5	2	M0110	DA97-13599A	ASSY RAIL-VEG L; 3050_BMF	SA	1
6	2		DA97-13616A	ASSY SHELF SLIDE-OUT; 3050(RL310),HOT STA	SA	1
7	2	G0239	DA97-13715A	ASSY COVER MULTI-REF; 3050_BMF,RB31, CONV	SA	1
7-1	3	G0242	DA31-00043F	MOTOR GEARED DC DAMPER; NSBA001TF1,DC 12V	SA	1
7-2	3	A1018	DA32-00006N	SENSOR TEMP; PX41C,502AT,DKST1329,TGV,-40	SC	1
7-3	3		DA62-04151B	SEAL INS MULTI-REF LOW; 3050_BMF,PE OPEN	SA	1
7-4	3		DA62-04078A	INSULATION-MULTI REF B; 3050_BMF,PS FOAM,	SNA	1
7-6	3	A0689	DA63-07480A	COVER-MULTI REF; 3050_BMF,PP,HB,COOL WHIT	SNA	1
8	2	A0270	DA67-30266K	CAP SCREW; A-TOP,PP,T1.5,HB,BJ750,COOL WH	SA	1
9	2	G0072	DA97-13533A	ASSY CONVERTIBLE; 3050	SA	1
9-1	3	M0403	DA97-13466A	ASSY CASE CONVERTIBLE; 3050_BMF	SC	1
9-1-1	4		DA97-13900A	ASSY CASE CONVERTIBLE-SUB; 3050_BMF,ASSY	SNA	1
9-1-1-1	5		DA97-14017A	ASSY CASE CONVERTIBLE-FRONT; 3050,HOT STA	SNA	1
9-1-1-1-1	6	G0246	DA61-09036A	CASE CONVERTIBLE-C; 3050,HIPS,COOL WHITE,	SA	1
9-1-2	4	G0248	DA62-04088A	INSULATION-CONV HIGH; 3050(BMF),PS FOAM,T	SA	1
9-1-3	4	G0245	DA61-09035A	CASE-CONVERTIBLE B; 3050(BMF),PP,NATURAL,	SA	1
9-1-4	4	G0244	DA61-09034A	CASE CONVERTIBLE-A; 3050,PP,COOL WHITE,EP	SA	1
9-1-5	4	G0249	DA66-00151A	ROLLER-FRONT; A-TOP,POM, 16,-,WHT,-,CONV	SA	2
9-1-6	4	A1018	DA32-00011X	SENSOR TEMP; PX-41C,502AT,DKST1329,MT-PJT	SA	1
9-1-7	4	G0247	DA62-04089A	INSULATION-CONV LOW; 3050(BMF),PS FOAM,T9	SA	1

Copyright© 1995-2018 SAMSUNG. All rights reserved.

No.	Lvl.	Loc.	Material Code	Description & Specification	SNA	Qty.
9-2	3		DA97-04106D	ASSY DAMPER-CONVERTIBLE; CORE-PJT(PRIMIUM	SNA	1
9-2-1	4	G0242	DA31-00071D	MOTOR GEARED DC DAMPER; NSY002TE1/DU25-07	SA	1
9-3	3	G0075	DA97-13497A	ASSY TRAY-CONVERTIBLE; 3050_BMF	SNA	1
9-3-1	4	G0078	DA63-07429A	TRAY CONVERTIBLE; 3050,GPPS,T2,TP BLUE,HB	SA	1
9-3-2	4		DA97-13682A	ASSY COVER-TRAY CONVERTIBLE; 3050 BMF,TRA	SA	1
10	2		DA75-00313B	RACK WINE; 3050-BMF,-,MSWR,6,503,304,natu	SC	1
11	2	A0730	DA97-13473A	ASSY CASE-VEG UPP; 3050,W479.2,L356.1	SA	1

Copyright© 1995-2018 SAMSUNG. All rights reserved.

3. Cabinet

Exploded View

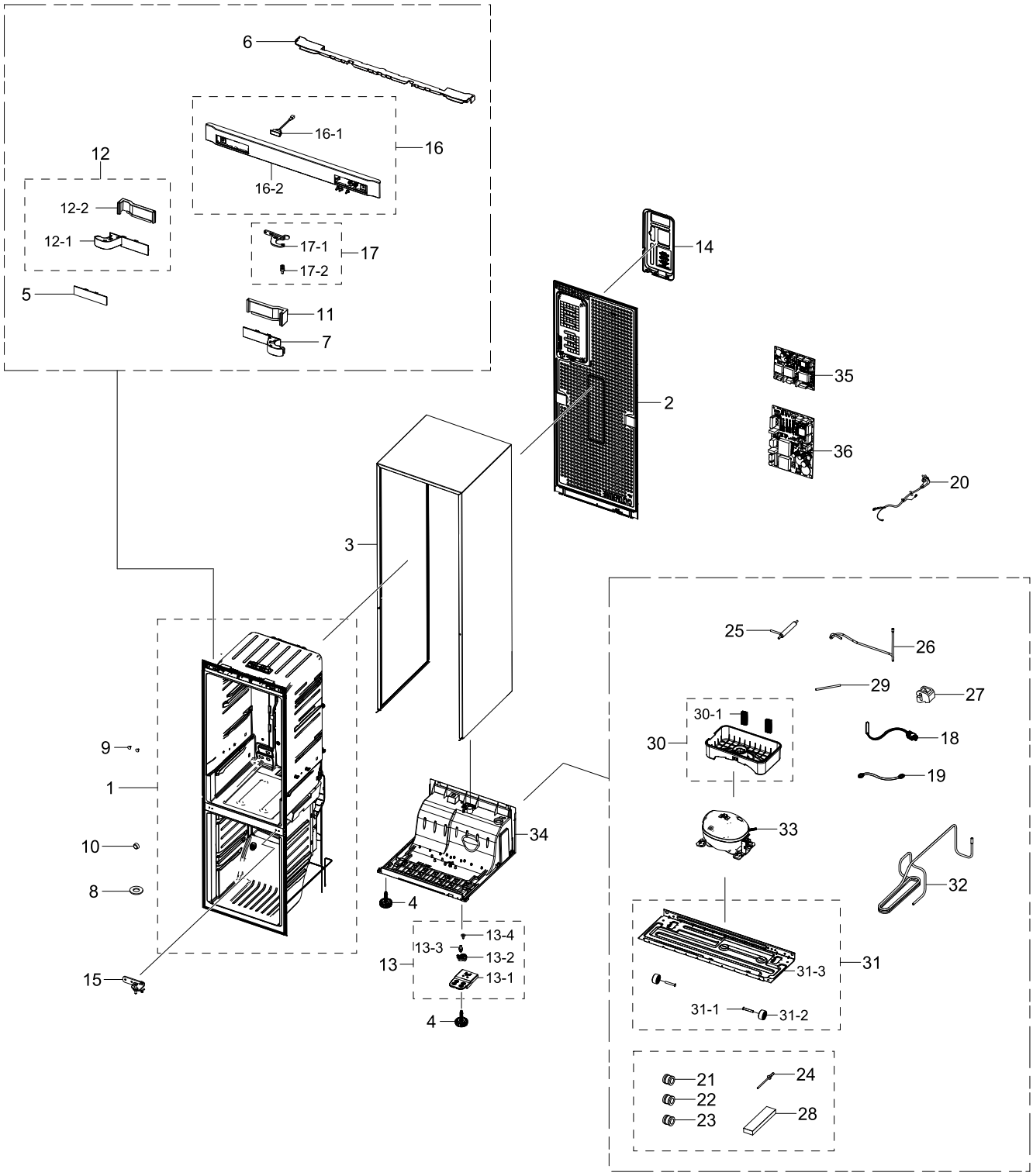

Copyright© 1995-2018 SAMSUNG. All rights reserved.

Parts List

No.	Lvl.	Loc.	Material Code	Description & Specification	SNA	Qty.
1	2	A0137	DA94-01317E	ASSY LINER; 3050-PJT,RB31F,C(BETTER)	SNA	1
2	2	A0918	DA97-13556D	ASSY CABI REAR FRAME; 310,GI,3050, RS-LIN	SNA	1
3	2		DA97-13509Z	ASSY CABI; 3050-PJT,RB31,,SS/SA,BETTER	SNA	1
4	2	Z1128	DA61-07546B	LEG-FRONT; GRAND CRU,PP,BLACK,RM60,PP Scr	SA	2
5	2		DA61-08932A	CAP CONTROL-PANEL; 3050,ABS,HB,HG-0760GP,	SA	1
6	2	G0215	DA63-07383A	COVER-WIRE DOOR; 3050,BMF,ABS,INOX GRAY,H	SA	1
7	2	G0213	DA63-07384A	COVER WIRE-HINGE R; 3050,ABS,T1.5,HB,INOX	SA	1
8	2		DA66-00073C	WASHER-SHAFT, C; SR-32,35,PVC,T1.0	SA	1
9	2	A0297	DA67-02684A	CAP SCREW; GRAND CRU,ABS,T1,HB,HG-0760GP,	SA	2
10	2		DA67-03725A	CAP SCREW; 3050,PP,HB,INOX GRAY	SA	1
11	2		DA67-03647A	CAP SPACE-DOOR R; 3050,ABS,HB,HG-0760GP,I	SA	1
12	2		DA91-04464A	ASSY INSTALL-ACCESSORY; INOX GRAY	SA	1
12-1	3	G0214	DA63-07385A	COVER WIRE-HINGE L; 3050,ABS,T1.5,HB,INOX	SA	1
12-2	3		DA67-03636A	CAP SPACE-DOOR L; 3050,ABS,HB,HG-0760GP,I	SA	1
13	2	A0515	DA97-13557B	ASSY HINGE LOW; 3050(BMF)	SA	1
13-1	3	A0247	DA61-08990A	HINGE-LOW; 3050PJ,PO-SPHC,T3,LMF	SA	1
13-2	3	A0516	DA61-08991B	GUIDE-AUTO CLOSE; 3050PJ,PA66,HB,HG-0760G	SA	1
13-3	3	A0518	DA66-00385A	SHAFT-HINGE; CORE,SWRCH10A,NATURAL,ZPC3(W	SA	1
13-4	3	A0848	DA81-01532A	SCREW-MACHINE; BH,+,M5,L12.7,ZPC(WHT),SWR	SA	1
14	2	M0306	DA97-13562A	ASSY COVER-PCB PANEL; 290, 310,GI,3050	SA	1
15	2	A0513	DA97-13564A	ASSY HINGE MID; 3050_BMF	SA	1
16	2	G0022	DA97-13615A	ASSY COVER CONTROL-PANEL; 3050PJT,ASSY,IN	SA	1
16-1	3	G0068	DA34-00043A	SWITCH REED; UL1007 AWG 22,100mm,DEM1-B50	SA	1
16-2	3	A0506	DA63-07353A	COVER-CONTROL PANEL; 3050,ABS,HB,INOX GRA	SA	1
17	2	A0705	DA97-13567A	ASSY HINGE UPP; 3050_BMF	SA	1
17-1	3	A0510	DA97-13566A	ASSY HINGE UPP-SUB; 3050_BMF	SA	1
17-2	3	A0518	DA66-00385A	SHAFT-HINGE; CORE,SWRCH10A,NATURAL,ZPC3(W	SA	1

Copyright© 1995-2018 SAMSUNG. All rights reserved.

No.	Lvl.	Loc.	Material Code	Description & Specification	SNA	Qty.
18	2	A1018	DA32-10105F	SENSOR TEMP; 502AT,PX-41C,DKST1329GW,ACE,	SA	1
19	2	A0562	DA39-20389A	ASSY WIRE HARNESS-EARTH; EARTH,ALL,,,,,FR	SA	1
20	2	A0273	3903-000793	POWER CORD-AT; H05VV-F 3x0.75mm2,BLK,EU3F	SA	1
21	2		DA60-00279A	FITTING-LOKRING 16; SUM23,16, 11SMnPb30K	SA	1
22	2		DA60-00280A	FITTING-LOKRING 33; SUM23,33, 11SMnPb30K	SA	1
23	2		DA60-00281A	FITTING LOKRING; SUM23,ID5.02,11SMnPb30K,	SA	1
24	2	A0328	DA60-90005A	FASTENER-RIVET; RR19,RR20,RR22,RR26,RT28,	SNA	1
25	2	A0669	DA62-04309C	DRYER; Cu,L118,SINGLE MOUTH,For Capi,OD15	SA	1
26	2		DA62-04325A	PIPE CONNECT; 3050,Cu,C1220T,OD6.35,T0.6	SA	1
27	2		DA63-07475A	GROMMET-IMMERSION PIPE D; 3050_LMF,NBR,20	SA	1
28	2		DA72-60040W	SEAL-CUTT RUBBER; TD-PJT,RUBBER,BLACK,T5,	SA	1
29	2	A0523	DA73-10190U	PIPE-CONNECT DISC,B; ALL,Cu,C1220T,OD6.35	SA	1
30	2	A0529	DA97-13658B	ASSY TRAY DRAIN WATER; 3050BMF,A1 COMP	SA	1
30-1	3		DA63-08036B	GROMMET-LOW; PVC,GRAY	SA	2
31	2	A0526	DA97-14151A	ASSY CHASSIS COMP; 3050-PJT,GI-SGCC, T0.8	SA	1
31-1	3	A0861	DA60-90146A	PIN-CASTER; SR-289-429,MSWR,L38,ZPC2	SA	2
31-2	3	A0527	DA61-06202A	CASTER-REAR; GRAND-CRU,PP,NATURAL	SA	2
31-3	3	A0526	DA97-13454A	ASSY CHASSIS COMP; 3050-PJT,T0.8,RB31	SC	1
32	2		DA97-13649A	ASSY PIPE IMMERGING; 3050_LMF,RL29,31	SNA	1
33	2		NC4AV80ALR/TT3	CMP,COMP,REFRIGERATOR,R600A; CMP,COMP,REFRIGERATOR,R600A		1
34	2		DA97-13563B	ASSY CABINET-BOTT FRAME; 290, 310,3050	SNA	1
35	1		DA92-00459Y	ASSY PCB INVERTER; INVERTER,BMF3050,148*9	SNA	1
36	1	A0952	DA92-00735Q	ASSY PCB MAIN; BETTER,3050-PJT,148*197,23	SA	1

Copyright© 1995-2018 SAMSUNG. All rights reserved.

4. Door

Exploded View

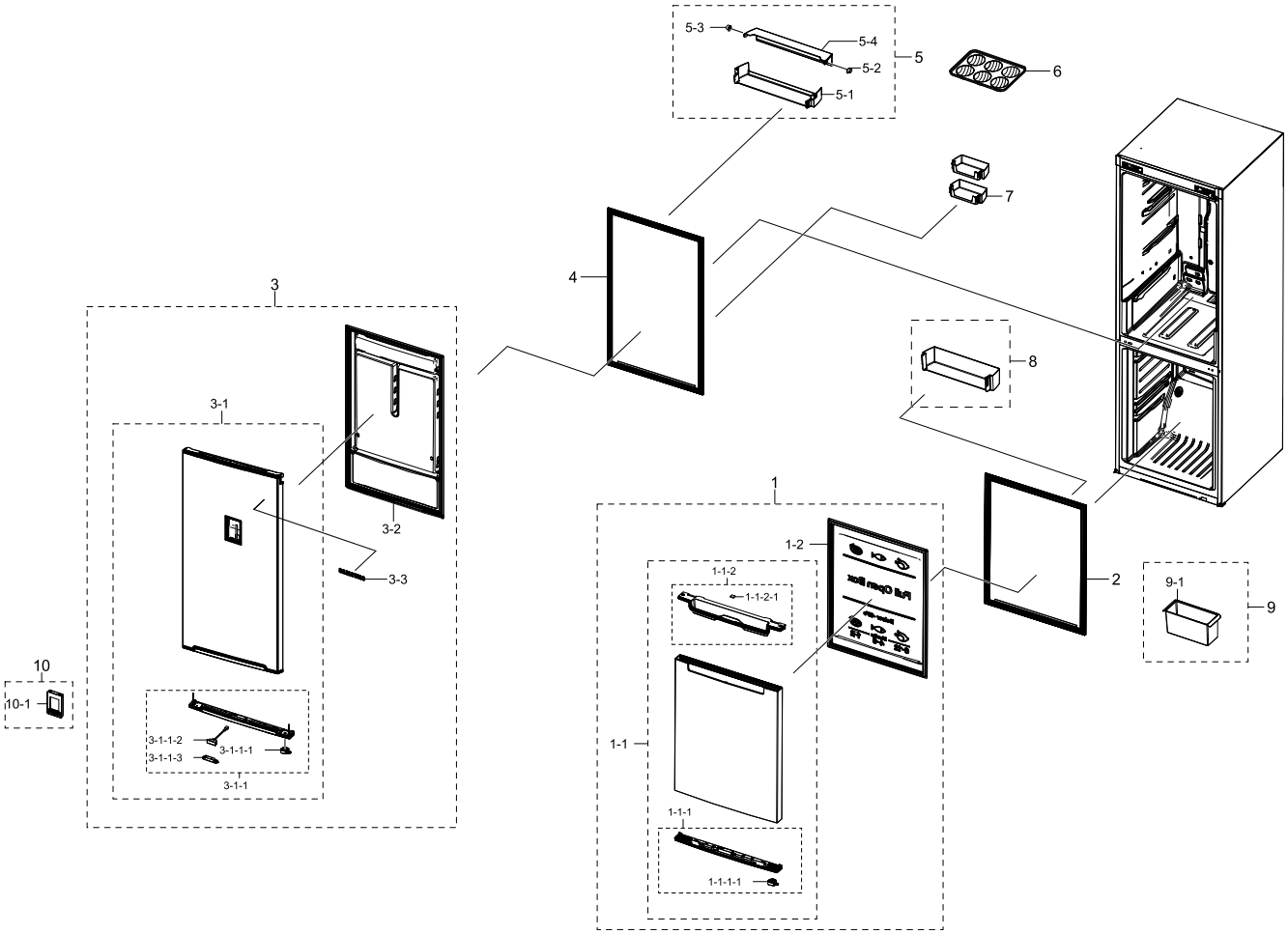

Parts List

No.	Lvl.	Loc.	Material Code	Description & Specification	SNA	Qty.
1	2	A0051	DA91-03975E	ASSY DOOR FOAM FRE; 310,BETTER,METAL GRAP	SA	1
1-1	3		DA97-13634F	ASSY PLATE DOOR-FRE; RECESS HANDLE,Metal	SNA	1
1-1-1	4		DA97-13583F	ASSY CAP DOOR-LOW; 3050,BMF,INOX GRAY,FRE	SNA	1
1-1-1-1	5		DA66-01011B	LEVER-AUTO CLOSE; 3050PJ,POM,EBONY BLACK,	SA	1
1-1-2	4		DA97-13586C	ASSY CAP DOOR-FRE UPP; 3050 BMF,I BLACK,R	SNA	1
1-1-2-1	5	A0534	DA61-03769B	MAGNET; SVETA,FERRITE,1600Gauss	SA	1
1-2	3		DA64-04431A	PANEL-DOOR FRE; 3050,RB31,HIPS,COOL WHITE	SNA	1
2	2		DA97-12383Y	ASSY-GASKET DOOR; GRAND-CRU, FRE RL56, RB	SA	1

Copyright© 1995-2018 SAMSUNG. All rights reserved.

No.	Lvl.	Loc.	Material Code	Description & Specification	SNA	Qty.
3	2	A0052	DA91-03974B	ASSY DOOR FOAM REF; 310,BETTER,METAL GRAP	SA	1
3-1	3		DA97-13627Q	ASSY PLATE DOOR-REF; Recess handle,A++Ene	SNA	1
3-1-1	4	A0048	DA97-13588A	ASSY CAP DOOR-REF LOW; 3050,BMF,I BLACK,R	SNA	1
3-1-1-1	5		DA66-01011B	LEVER-AUTO CLOSE; 3050PJ,POM,EBONY BLACK,	SA	1
3-1-1-2	5		DA34-00043J	SWITCH REED; UL1007 AWG 22,50mm	SA	1
3-1-1-3	5	G0271	DA67-02385B	CAP-REED SWITCH; SVETA-PJT,PP,T1.5,75.5,1	SA	1
3-2	3	A0300	DA64-04428A	PANEL-DOOR REF; 3050,RB31,HIPS,COOL WHITE	SNA	1
3-3	3	M0196	DA64-04020C	MASCOT; ALL,Ni,T0.06,L80	SA	1
4	2	A0535	DA97-13594B	ASSY-GASKET DOOR REF; RB31,3050,GASKET-SE	SA	1
5	2	A0636	DA97-15689A	ASSY GUARD DAIRY; 3050_BMF,ASSY	SA	1
5-1	3		DA63-07404A	GUARD-DAIRY CASE; 3050,GPPS,TP BLUE,HB,16	SA	1
5-2	3		DA67-02920A	CAP-HINGE DAIRY R; HERMES,POM,K300,NATURA	SA	1
5-3	3		DA67-02921A	CAP-HINGE DAIRY L; HERMES,POM,K300,NATURA	SA	1
5-4	3		DA63-07405A	GUARD-DAIRY COVER; 3050,GPPS,TP BLUE,HB,1	SA	1
6	2	A0656	DA63-07346A	TRAY EGG; 3050,GPPS,HB,TP BLUE,165N,HI-IM	SA	1
7	2	A0153	DA63-08117A	GUARD VARIETY; RB5000J,GPPS,T3,TP BLUE,16	SA	2
8	2	A0151	DA63-08118A	GUARD BOTTLE; RB5000J,GPPS,T3,TP BLUE	SA	1
9	2		DA97-13694A	ASSY GUARD-SAUCE; 3050,SILK PRINT	SNA	1
9-1	3		DA63-07406A	GUARD-SAUCE; 3050,GPPS,TP BLUE,HB,147F,HI	SA	1
10	2	A0626	DA97-17154B	ASSY COVER CONTROL; 3050BMF,CSZ,Ice Blue	SA	1
10-1	3	A0626	DA97-15616G	ASSY COVER CONTROL; Poland,REF-PBA1D0046	SA	1

Copyright© 1995-2018 SAMSUNG. All rights reserved.