	F2 EXPLODED VIEW

1. CONTROL PANEL PARTS

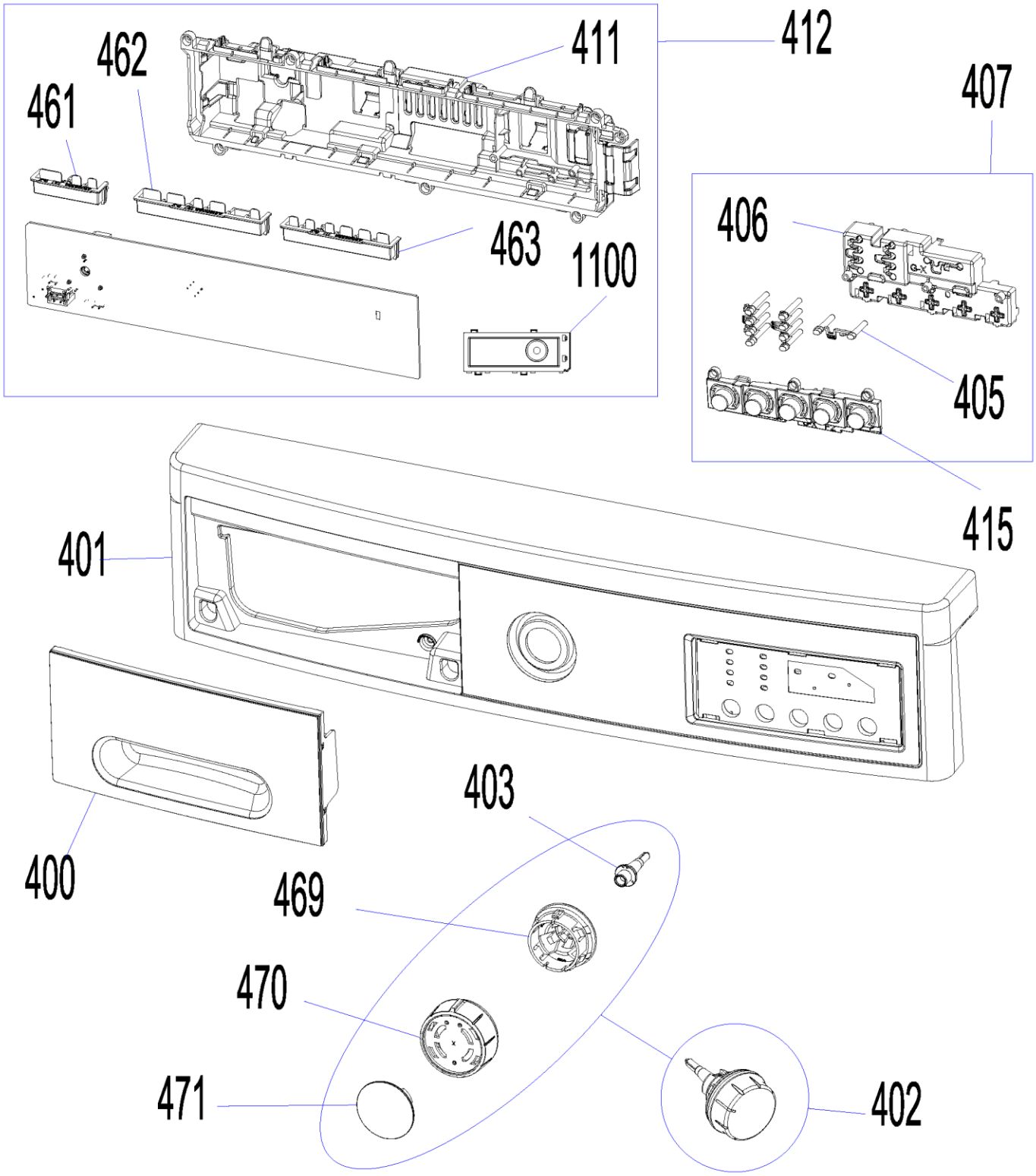

	F2 EXPLODED VIEW

NO	PART NAME	QUANTITY
400	DETERGENT DRAWER COVER	1
401	CONTROL PANEL	1
402	PR. ADJUSTMENT KNOB GR	1
403	PROGRAMME ADJUSTMENT SHAFT	1
405	LIGHT GUIDE DUO	1
406	CARD BOX	1
407	F2 BUTTON-LIGHT GUIDE GROUP	1
411	PCB BOX	1
412	ELECTRONIC CARD	1
415	TRIPLE SELECTION BUTTON	1
461	SOCKET HOLDER-F1	1
462	SOCKET HOLDER-F2	1
463	SOCKET HOLDER-F3	1
469	PROGRAM ADJ. INSERT	1
470	PROGRAM ADJ. KNOB	1
471	PROGRAM ADJ. KNOB COVER	1
500	CONTROL PANEL GROUP (indicated for the website)	1
1100	PCB BOX REAR COVER	1

POSICION	CODIGO	DESCRIPCION	FOTO1	FOTO2
401	42173991	**CONTROL PANEL**		
412	20881955	**PCB AS**		
402	42103118	**DIAL ENTERO.**		
470	42082603	**SOPORTE DIAL**		
471	42082604	**TAPA DIAL**		

	F2 EXPLODED VIEW

2. FRONT PANEL PARTS

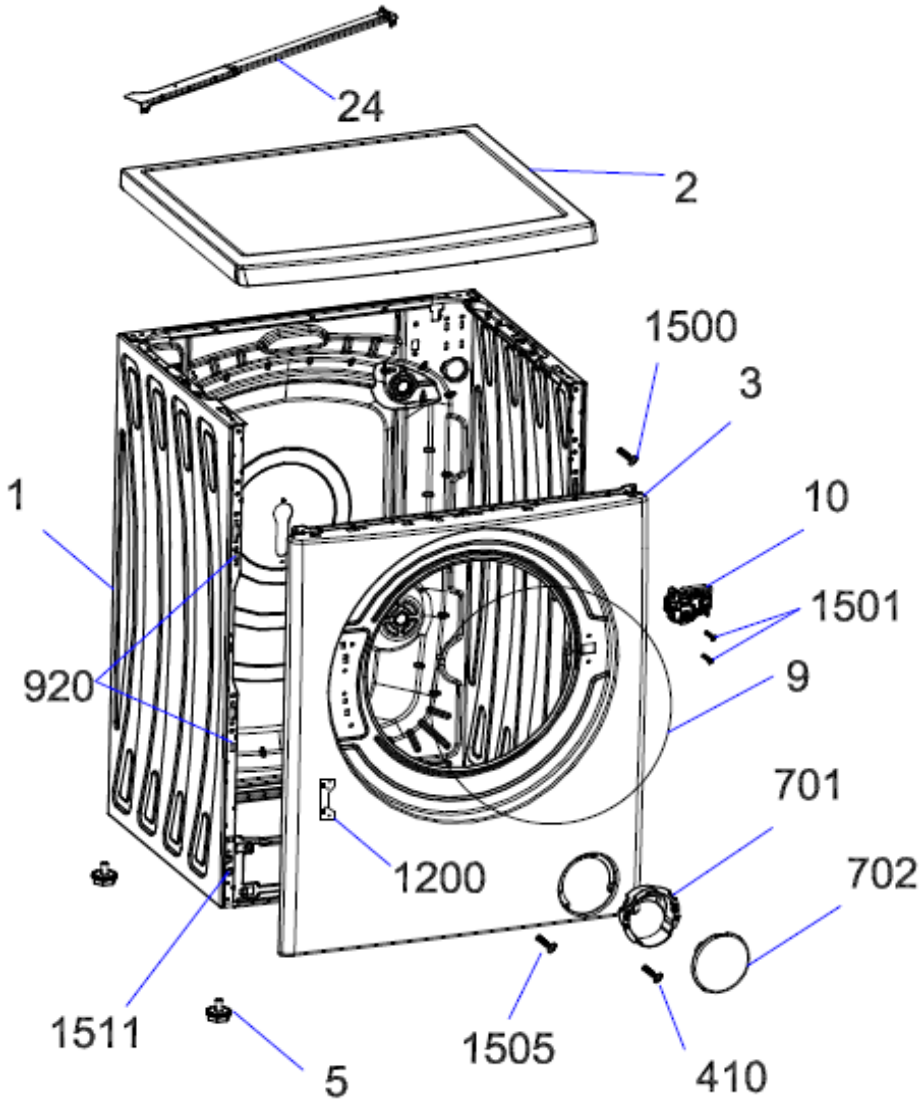

REF. NO	PART NAME	QTY
1	BODY GROUP PAINTED	1
2	UPPER TRAY GROUP	1
3	FRONT PANEL GROUP	1
5	ADJUSTABLE FEET GR.	4
9	HOUSING FRAME BELLOW CLIP-PHYTON	1
10	DOOR LOCK	1
24	UPPER SUPPORT BRAKET	1
701	PUMP COVER HOUSING	1
702	PUMP COVER	1
920	FRONT PANEL DROP FIXING PLASTIC-II	4
1200	HINGE SUPPORT SHEET	1
1500	ST 4,2X9,5 TRTSB	2
1501	ISO 7049 ST 4,2X16 TORX	2
1504	ISO 7049 ST 4,2X13 TORX	4
1505	ST 4,8X9,5 PAN HE.WITH COL.TORX UN.SER.E	2
1511	FRONT PANEL DROP FIXING PLASTIC-I-B	2
410	SCREW 4X12 TORX PAN HE.W.COL.UND.HE.SER.	1

POSICION	CODIGO	DESCRIPCION	FOTO1	FOTO2
2	42028889	**TAPA ENCIMERA**	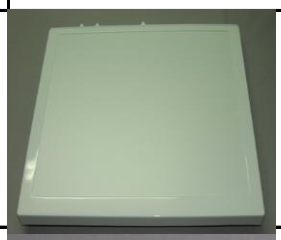	
10	32005174	**DOOR LOCK**		

	F2 EXPLODED VIEW

3.WASHING GROUP PARTS

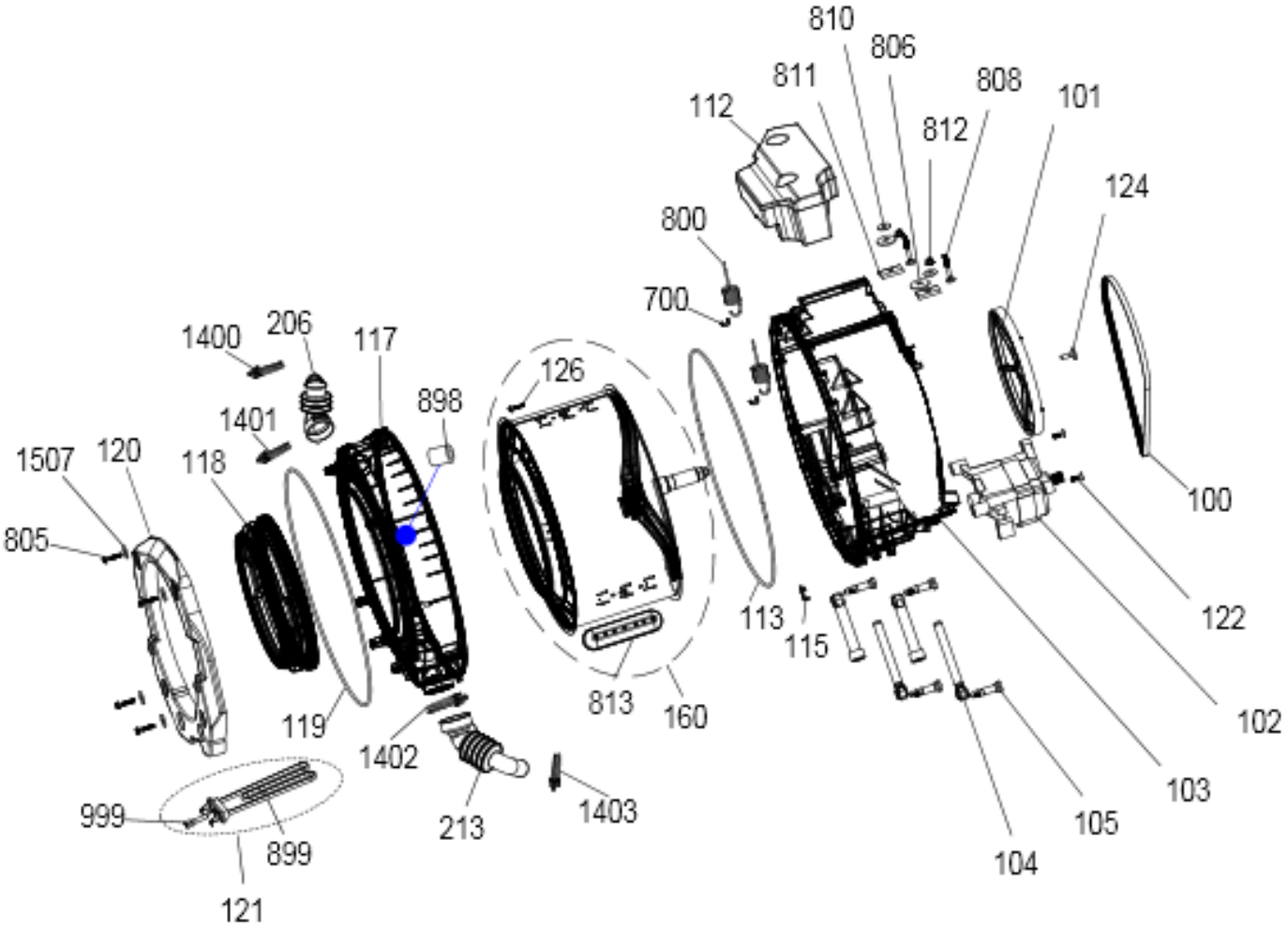

	F2 EXPLODED VIEW

NO	PART NAME	QUANTITY
100	BELT	1
101	DRIVEN PULLEY	1
102	MOTOR	1
103	REAR TUB GROUP	1
104	SHOCK ABSORBER	2
105	SHOCK ABSORBER PIM	2
112	UPPER COUNTERWEIGHT	1
113	TUB SEAL	1
115	RESISTANCE FIXING WIRE	1
117	FRONT TUB	1
118	TUB BELLOWS SEAL	1
119	TUB BELLOW CLIP	1
120	FRONT COUNTERWEIGHT	1
121	RESISTANCE GROUP	1
122	COUNTERSUNK HEAD BOLT 8X25 TORK	2
124	COUNTERSUNK HEAD BOLD M 8X29	1
126	HEXAGON HEAD BOLT 6 X 30	12
160	DRUM GROUP	1
206	TUB ENTERANCE WITH BELLOW HOSE	1
213	TUB EXIT WITH BELLOW HOSE	1
700	TUB HANGER SPRING PART	2
800	HANGER SPRING	2
806	DUZ RONDELA 8.4X28X3	2
807	HEXAGON HEAD BOLT	4
808	WASHER 8,4X28X3	4
809	WASHER 8,5X35X3	2
811	UPPER CONCRETE SUPPORT SHEET IRON PART	2
812	NUT M8	2
813	PLASTIC LIFTER	1
810	UPPER COUNTERWEIGHT WASHER 9X30X3	3
898	PSW HOSE MOUNTING RUBBER	2
899	RESISTANCE WITHOUT NTC	1
999	NTC	1
1400	SCREWED HOSE CLAMP Ø65	1
1401	SPRING TYPE BANT CLAMP	1
1402	HOSE CLAMP SCREW TYPE Ø72	1
1403	HOSE CLAMP Ø38,8	1
1507	DÜZ RONDELA 10.5X30X2.5	4

POSICION	CODIGO	DESCRIPCION	FOTO1	FOTO2
100	42028149	**CORREA MOTOR**		
101	37017803	**PULLEY**		
102	32016267	**MOTOR**		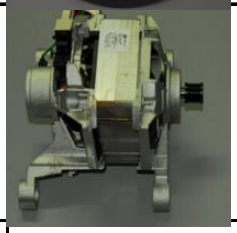
103	20820299	**CUBA TRASERA + RETEN + COJINETES**		
104	47010522	**AMORTIGUADOR**		
105	42025094	**PASADOR AMORTIGUACION**		
117	42105195	**SEMICUBA DELANTERA.**		
118	42077485	**GOMA ESCOTILLA**		
121	20846083	**RESISTENCIA+ TERMISTOR**		

160	20820259	**BOMBO + CRUCETA**		
203	42079698	**TUBO DE CUBA A BOMBA + CAMARA PRESOSTATO Y TUBO**		
206	42087110	**TUBO DE DEPOSITO DETERGENTE A CUBA**		
800	37022658	**MUELLE CUBA**	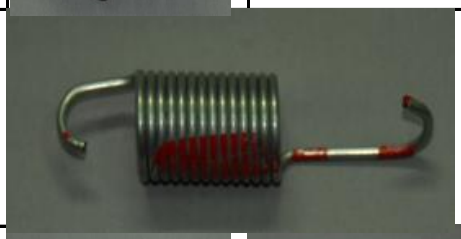	
813	42148896	**BATIDOR**		
999	32025771	**TERMISTOR**		

4.DETERGENT DRAWER GROUP

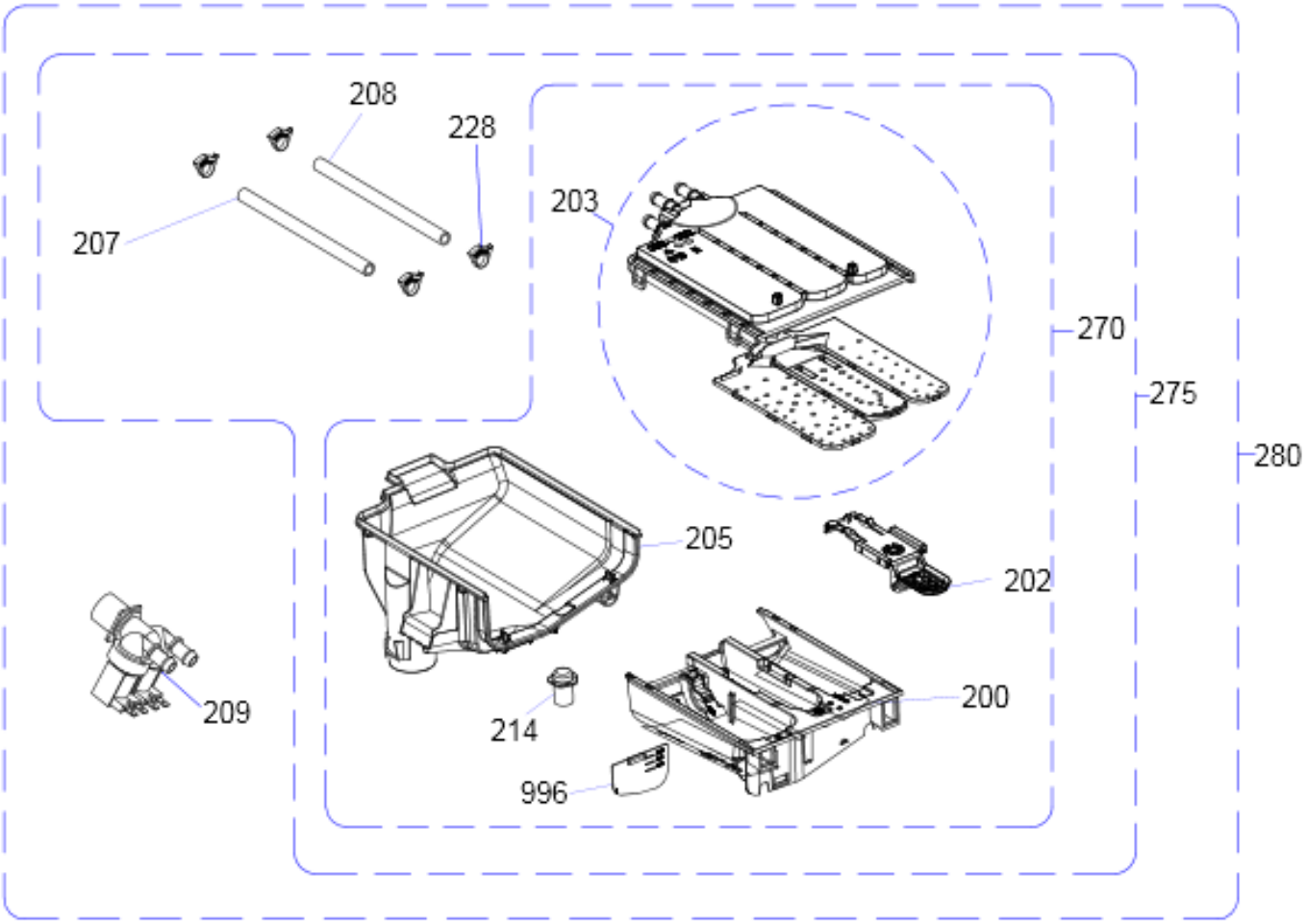

NO	PART NAME	QUANTITY
200	DETERGENT DRAWER	1
202	SIPHON COVER	1
203	WATER DISTRIBUTION PLATE GROUP	1
205	DETERGENT DRAWER HOUSING	1
207	VALVE-DETERGENT BOX HOSE	1
209	VALVE(TWO EXIT)	1
214	DETERGENT DRAWER LOCKING PART	1
228	PLASTIC HOSE CLAMP	6
996	LIQUID DETERGENT LEVEL PLATE	1
270	DETERGENT BOX GROUP	1
275	DETERGENT BOX GROUP/HOSE	1
280	DETERGENT BOX GROUP/FULL	1

POSICION	CODIGO	DESCRIPCION	FOTO1	FOTO2
280	42076595	**DEPOSITO JABONERA+VALVULA+TUBOS DE ENTRADA**		
209	30023393	**VALVULA ENTADA AGUA**		

5. PRESSURE SWITCH HOSE GROUP

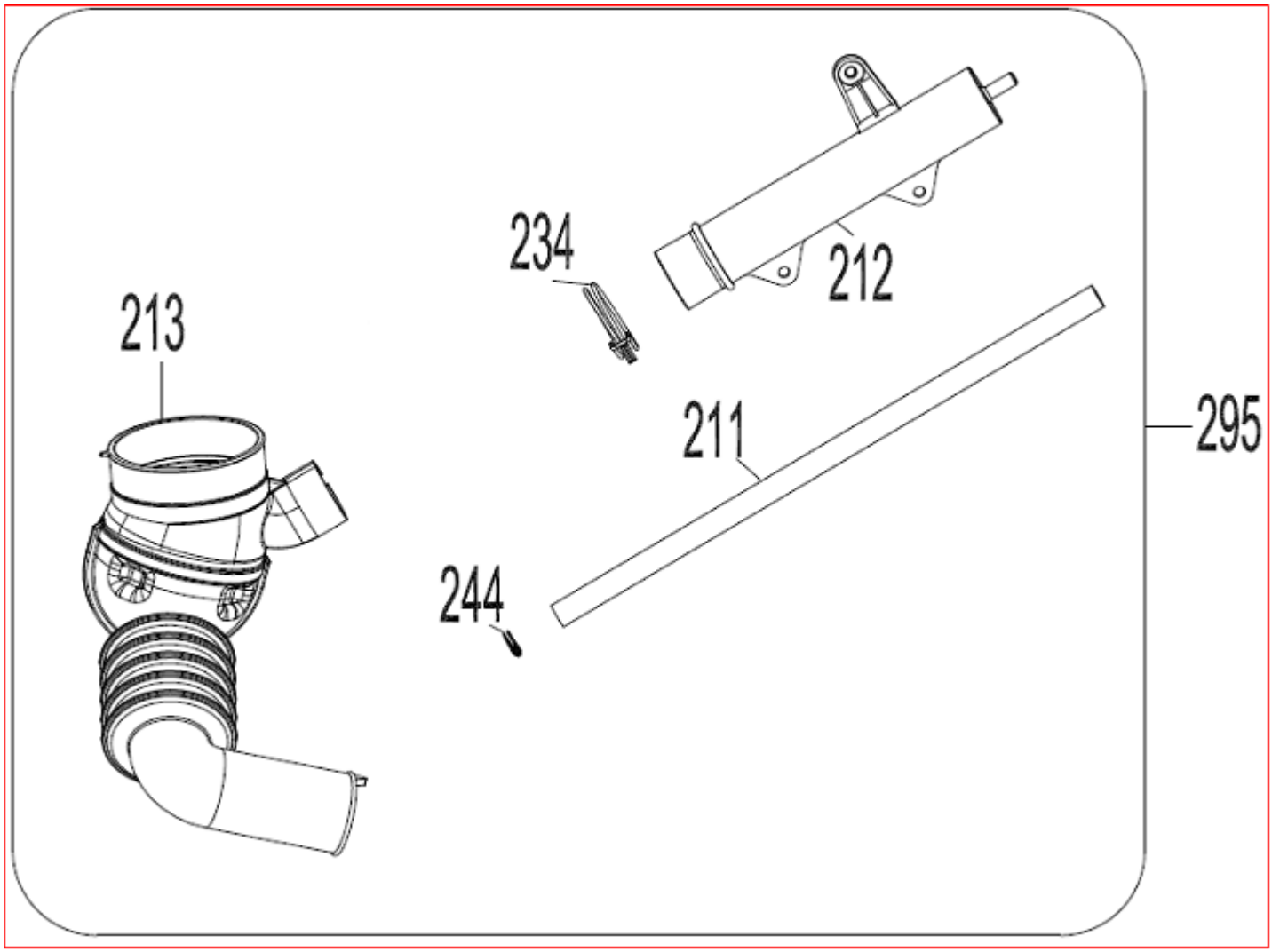

NO	PART NAME	QUANTITY
213	TUB EXIT WITH BELLOW HOSE	1
212	PRESSURE SWITCH WATER RESERVOIR	1
211	PRESSURE SWITCH HOSE	1
234	HOSE CLAMP Ø32,7	1
244	HOSE CLAMP Ø9,6	1
295	PRESSURE SWITCH HOSE GROUP	1

213-212-211-234-244---------- PRESSURE SWITCH HOSE GROUP

POSICION	CODIGO	DESCRIPCION	FOTO1	FOTO2
295	42079698	**TUBO DE CUBA A BOMBA + CAMARA PRESOSTATO Y TUBO**		

	F2 EXPLODED VIEW

6. BODY GROUP PARTS

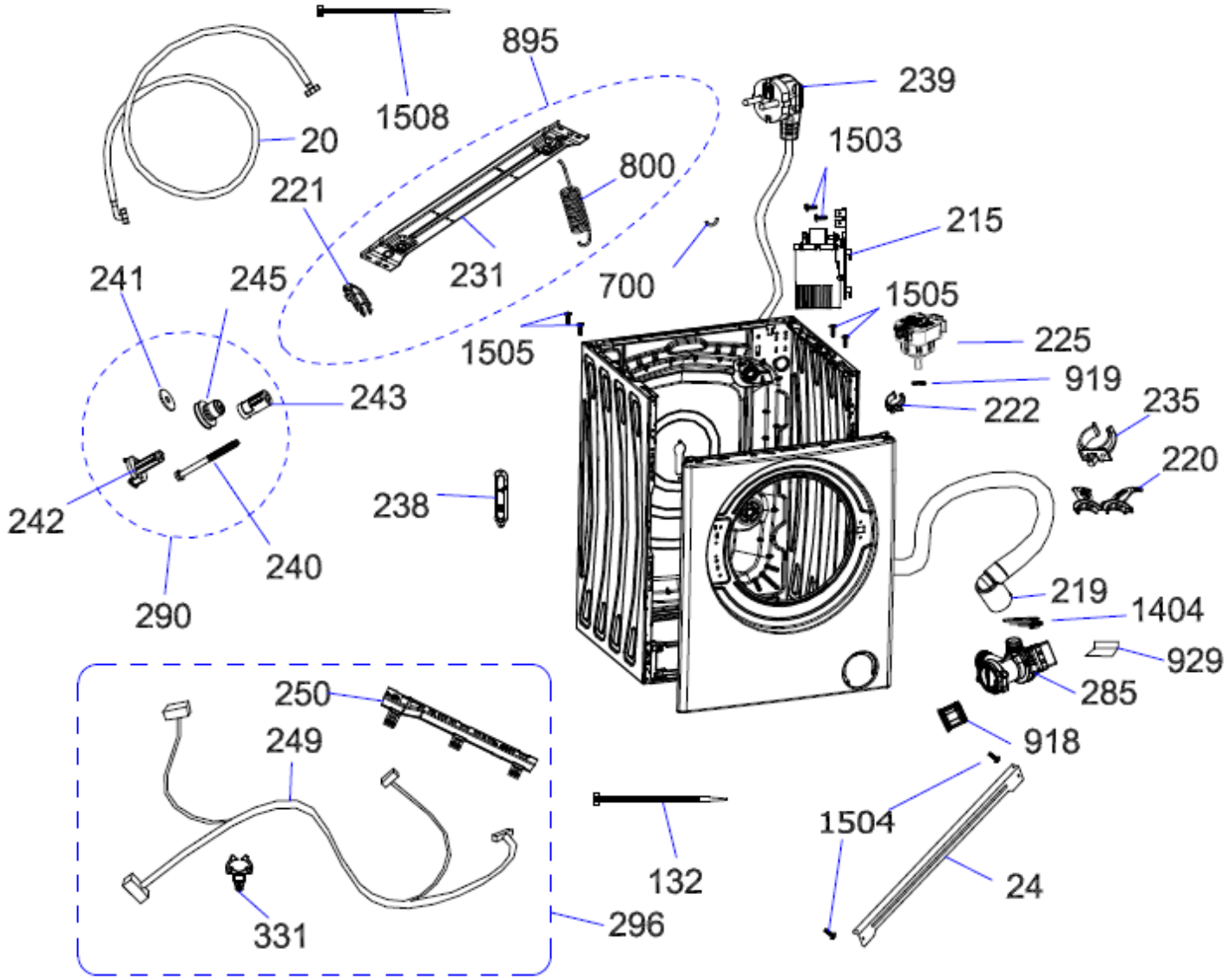

	F2 EXPLODED VIEW

REF. NO	PART NAME	QTY
20	WATER ENTRY HOSE GROUP	1
24	UPPER SUPPORT BRACKET	1
285	PUMP GROUP	1
220	DRAIN HOSE ROUTER PLASTIC	1
219	DRAIN HOSE	1
225	ELECTRONIC PRESSURE SENSOR	1
215	EMI FILTER	1
296	CABLE GR	1
249	CABLE HARNESS	1
250	CABLE HARNESS HOLDER PLS	1
331	LOCKING WIRE SADDLE (BLUE)	1
895	SPRONG HANGER BRACKET GROUP	1
800	TUB SPRING	2
231	SPRING HANGER BRACKET	1
221	HANGER SPRING BRACKET PLS.	2
700	TUB HANGER SPRING PART (PLASTIC HOUSING PART BETWEEN TUB AND SPRING HOOK)	2
235	DRAIN HOSE HOLDING PLS	4
239	POWER CORD GROUP	1
222	PRESSURE SWITCH MOUNTING CLIP	1
238	SPEED CONTROL HOLE STOPPER	1
290	TRANSPORT SCREW GROUP-II	4
242	TRANSPORT SCREW PLASTIC-A-II	4
243	TRANSPORT SCREW PLASTIC-B-II	4
240	TRANSPORT SCREW	4
245	TRANSPORT SCREW EPDM	4
241	PLAIN WASHER 8,30X29X2	4
132	CABLE TIE(YKB150)	7
918	PUMP FILTER	1
919	HOSE CLAMP Ø8,6	1
1404	HOSE CLAMP.Ø35,0	1
1503	ST 4,2X9,5 PAN HEAD W.COL.T.UNDER.SER.EA	2
1504	ISO 7049 ST 4,2X13 TORX	4
1505	ST 4,2X9,5 TRTSB	4

POSICION	CODIGO	DESCRIPCION	FOTO1	FOTO2
225	32025730	**PRESOSTATO**		
285	32023775	**BOMBA+ CUERPO FILTRO + FILTRO**		
800	37022658	**MUELLE CUBA**		

7. DOOR GROUP

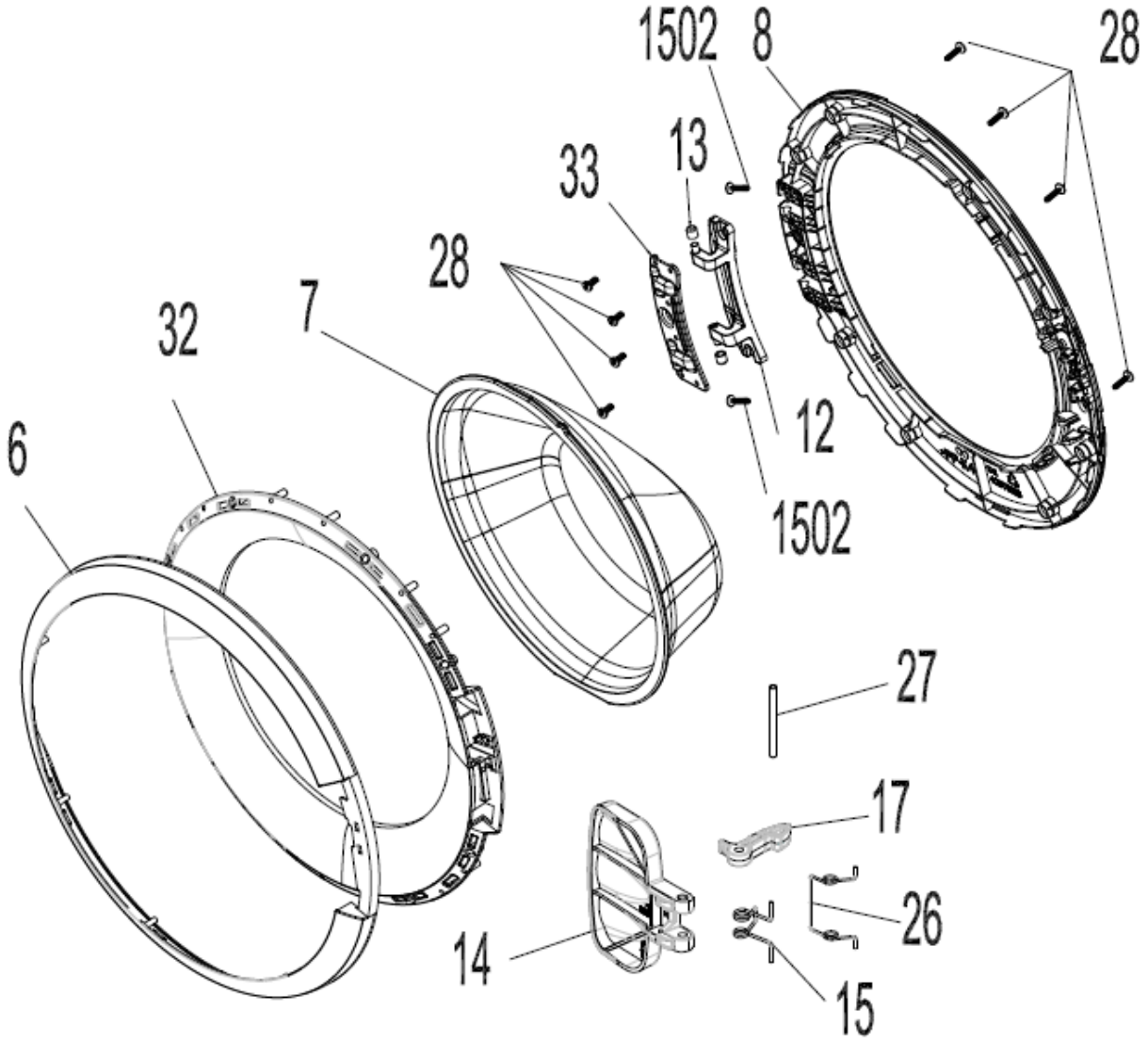

NO	PART NAME	QUANTITY
6	PORTHOLE OUTER PLASTIC	1
7	DOOR GLASS	1
8	PORTHOLE INNEER PLASTIC	1
12	SHEET METAL HINGE GROUP	1
13	HINGE PLASTIC	2
14	DOOR HANDLE	1
15	HOOK SPRING	1
16	HANDLE SPRING	1
17	HOOK	1
26	HANDLE SPRING	1
27	DOOR HANDLE PIM	2
28	SCREW 3.5X16PAN.HE.WITH COL.CR.RE.UN.HE	8
*32	PORTHOLE INNER FRAME	1
50	PORTHOLE GROUP (1502 excluded)	1
1502	SCREW M5X8 TSB (this part is not include in porthole group)	2

*** 32 "This spare part is optional and depends on agreed specifications. Therefore you may not find this position number in product's spare part list."**

POSICION	CODIGO	DESCRIPCION	FOTO1	FOTO2
	42116461	**PUERTA COMPLETA**	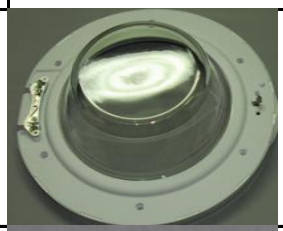	
27	35007434	**PASADOR MANETA**	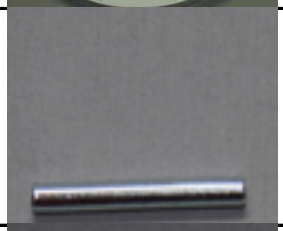	
15	35007443	**MUELLE MANETA**		
17	37008931	**GANCHO PUERTA**		
14	42116450	**MANETA**		
7	47003030	**CRISTAL PUERTA**		

ACCESSORIES

995

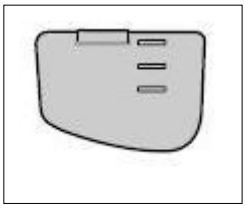

996

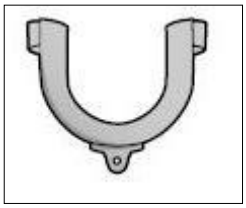

997

998

NO	PART NAME	QUANTITY
995	ENERGY LABEL	1
996	LIQUID DETERGENT LEVEL PLATE	1
997	DRAIN HOSE COAT RACK	1
998	TRANSPORT SCREW STOPPER	4